# STANDARD DRAWING INDEX

| DRAWING NUMBER | DESCRIPTION | DATE LAST MODIFIED |
|---|---|---|
| | | |
| 100 | KERBS | |
| SD 100 | TYPICAL RESIDENTIAL KERB PROFILES | 06.11.18 |
| SD 105 | TYPICAL INDUSTRIAL KERB PROFILES | 06.11.18 |
| SD 110 | KERB & WATERTABLE INSTALLATION ABUTTING EXISTING PAVEMENT | 06.11.18 |
| SD 115 | STANDARD STORMWATER KERB OUTLET DETAILS - INSTALLED DURING CONSTRUCTION | 06.11.18 |
| SD 120 | HEAVY DUTY STORMWATER KERB OUTLET DETAILS - EXISTING KERB | 10.05.16 |
| SD 125 | KERB RAMP SPECIFICATIONS SHEET 1 OF 2 | 06.11.18 |
| SD 130 | KERB RAMP SPECIFICATIONS SHEET 2 OF 2 | 18.07.17 |
| 200 | PAVEMENTS | |
| SD 200 | TYPICAL PEDESTRIAN CROSSING ARRANGEMENT DETAIL | 18.07.17 |
| SD 205 | TYPICAL CONCRETE FOOTPATH DETAIL SHEET 1 0F 2 | 06.11.18 |
| SD 210 | TYPICAL CONCRETE FOOTPATH DETAIL SHEET 2 0F 2 | 18.07.17 |
| SD 215 | TYPICAL HOT MIX ASPHALT FOOTPATH | 18.07.17 |
| SD 220 | BLOCK PAVED FOOTPATH | 06.11.18 |
| SD 225 | RETROFIT RESIDENTIAL VEHICLE CROSSING DETAIL | 06.11.18 |
| SD 235 | VEHICLE BLOCK PAVED CROSSING DETAIL | 06.11.18 |
| SD 240 | INDUSTRIAL VEHICLE CROSSING DETAIL | 06.11.18 |
| SD 245 | VEHICLE CROSSING LONGITUDINAL SECTIONS | 18.07.17 |
| SD 250 | TYPICAL SWALE DRAIN RESIDENTIAL VEHICLE CROSSING (RURAL ENTRANCE) | 06.11.18 |
| SD 255 | TYPICAL SWALE DRAIN RESIDENTIAL VEHICLE CROSSING (URBAN ENTRANCE) | 06.11.18 |
| SD 260 | TYPICAL SWALE DRAIN HEAVY VEHICLE CROSSING (RURAL ENTRANCE) | 10.05.16 |
| SD 265 | TYPICAL PAVEMENT SUBSOIL DRAINAGE | 06.11.18 |
| SD 270 | TYPICAL ROAD CROSSING TRENCH BACKFILL REQUIREMENTS | 06.11.18 |
| SD 275 | TYPICAL BUS STOP DETAIL | 18.07.17 |
| 300 | PITS AND DRAINAGE STRUCTURES | |
| SD 300 | STORMWATER PITS REINFORCEMENT DETAILS | 06.11.18 |
| SD 305 | STORMWATER JUNCTION PIT | 06.11.18 |
| SD 310 | STORMWATER DEPRESSED GRATED PIT | 18.07.17 |
| SD 315 | STORMWATER INLET CATCH PIT / FIELD GULLY | 18.07.17 |
| SD 320 | STORMWATER SIDE ENTRY PIT 900mm INLET | 18.07.17 |
| SD 325 | STORMWATER SIDE ENTRY PIT AND LIDS WITH PRECAST LINTEL | 06.11.18 |
| SD 330 | STORMWATER DOUBLE SIDE ENTRY PIT 1900mm INLET | 18.07.17 |
| SD 335 | PRECAST SIDE ENTRY PIT INLET WITH GRATE INLINE | 18.07.17 |
| SD 340 | OFFSET SIDE ENTRY PIT WITH 900mm INLET GRATE | 06.11.18 |
| SD 341 | BANDAGE JOINT | 06.11.18 |
| SD 345 | STANDARD HEADWALL FOR PIPES 300-375 DIAMETER | 06.11.18 |
| SD 350 | STANDARD HEADWALL FOR PIPES 450-750 DIAMETER | 06.11.18 |
| SD 351 | STANDARD HEADWALL FOR SINGLE PIPES 825-1800 DIAMETER | 06.11.18 |
| SD 355 | STANDARD HEADWALL FOR TWIN PIPES 825-1800 DIAMETER | 17.07.17 |

| DRAWING NUMBER | DESCRIPTION | DATE LAST MODIFIED |
|---|---|---|
| | | |
| 300 | PITS AND DRAINAGE STRUCTURES CONTINUED. | |
| SD 365 | CONCRETE ENDWALL FOR PIPES UP TO 300mmØ (WALKWAYS,PATHS AND TRACKS) | 10.06.16 |
| SD 370 | NATURAL LOOK CONCRETE AND BOULDER HEADWALL | 10.06.16 |
| SD 375 | STORMWATER CATCH DRAIN DETAILS | 18.07.17 |
| SD 380 | DRAIN STORMWATER ALLOTMENT TO KERB AND CHANNEL CONNECTION | 18.07.17 |
| SD 385 | STORMWATER ALLOTMENT DRAIN CONNECTION TO AUTHORITY PIPELINE | 06.11.18 |
| SD 390 | STORMWATER ALLOTMENT CONNECTION IN EASEMENT DETAIL | 06.11.18 |
| SD 395 | SUBSOIL DRAINAGE FLUSHOUT RISER DETAIL | 10.05.16 |
| 400 | PITS AND DRAINAGE STRUCTURES | |
| SD 400 | STORMWATER DRAINAGE PIPE ANCHOR BLOCK | 18.07.17 |
| 500 | TYPICAL ROAD PROFILES | |
| SD 500 | TYPICAL ROAD SECTIONS | 06.11.18 |
| SD 505 | TYPICAL ROAD SECTION LAYOUT | 06.11.18 |
| SD 510 | TYPICAL ROAD PROFILES RURAL LIVING & LOW DENSITY RESIDENTIAL AREAS | 10.05.16 |
| SD 515 | TYPICAL ROAD SECTIONS URBAN AREAS | 18.07.17 |
| SD 520 | TYPICAL ROAD PROFILES COMMERCIAL STREET / INDUSTRIAL STREET | 18.07.17 |
| 600 | FLOODWAY DETAILS | |
| SD 600 | FLOODWAY - GENERAL ARRANGEMENT LOW VOLUME RURAL ROADS | 06.11.18 |
| SD 605 | FLOODWAY - DETAILS LOW VOLUME RURAL ROADS | 10.05.16 |
| 700 | COMMUNITY WASTE WATER MANAGEMENT SYSTEMS | |
| SD 700 | TRENCH AND BACKFILL DETAILS | 06.11.18 |
| SD 705 | NEW CONNECTION / EXISTING OF MAINS | 06.11.18 |
| SD 710 | TYPICAL CONNECTION I.P. LOCATIONS | 06.11.18 |
| SD 715 | 'Y' CONNECTION OFF AN EXISTING CONNECTION | 06.11.18 |
| SD 720 | SEALING CAP DETAILS AND IN LINE FLUSHING POINT LOCATIONS | 06.11.18 |
| SD 725 | TYPICAL CONNECTION AND FLUSHING POINT COVER DETAILS | 06.11.18 |
| SD 730 | FLUSHING POINT OR MAXIMUM DEPTH CONNECTIONS | 06.11.18 |
| SD 735 | TERMINAL OF DRAIN LINE & FLUSH POINT | 06.11.18 |
| SD 740 | TYPICAL CONCRETE ENCASEMENT OF DRAIN OR RISING MAIN THROUGH CREEKS | 06.11.18 |
| SD 745 | MAINTENANCE HOLE / ACCESS CHAMBER ( MH / AC ) | 06.11.18 |

WHILE ALL REASONABLE ATTEMPS HAVE BEEN MADE TO ENSURE THESE STANDARD DETAILS ARE FIT FOR PURPOSE, THEY SHOULD BE REVIEWED WITH SPECIFIC SITE CONDITIONS IN MIND. IF THE DETAIL IS TRANSFERRED INTO ANOTHER DRAWING WITH OR WITHOUT MODIFICATION, THE USER TAKES FULL RESPONSIBILITY FOR DESIGN CONSIDERATIONS SHOWN IN THE DETAIL.

| REV | DESCRIPTION | DATE | DES | DRW | APP |
|---|---|---|---|---|---|
| G | MINOR AMENDMENTS | 06.11.2018 | AF | AF | MDH |
| F | MINOR AMENDMENTS | 18.07.2017 | JZ | SGP | DSL |
| E | ISSUED FOR REVIEW | 07.07.2016 | JZ | SGP | DSL |
| D | ISSUED FOR REVIEW | 05.07.2016 | JZ | DL | DSL |
| C | ISSUED FOR REVIEW | 10.06.2016 | JZ | DL | DSL |

THIS PROJECT HAS BEEN ASSISTED BY THE LOCAL GOVERNMENT RESEARCH AND DEVELOPMENT SCHEME AND INSTITUTE OF PUBLIC WORKS ENGINEERING AUSTRALASIA

INFRASTRUCTURE GUIDELINES (SA)

SHEET TITLE
STANDARD DRAWING INDEX

SCALE
N/A @ A3

DRAWING No.
SD 000

REV
G

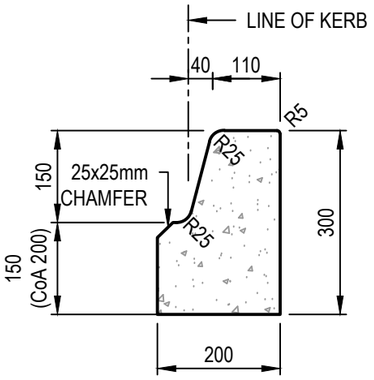


150mm BARRIER KERB ONLY

①

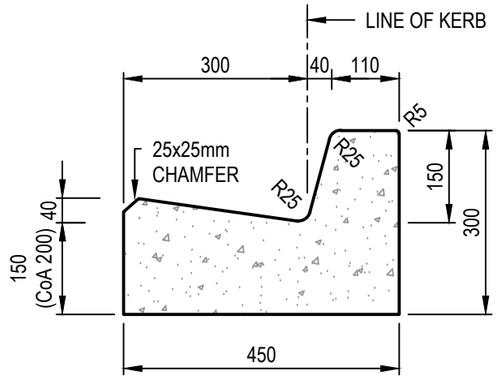


150mm BARRIER KERB AND WATER TABLE

②

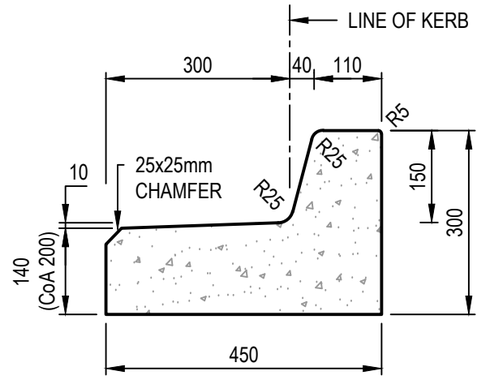


150mm BARRIER KERB AND TRAY

③

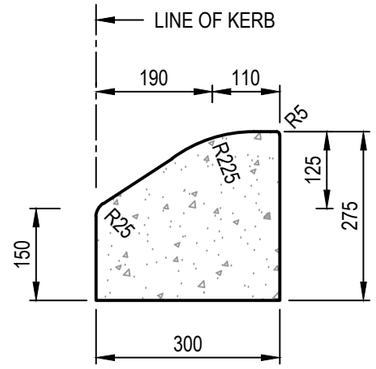


SEMI-MOUNTABLE KERB ONLY

*NOT TO BE USED FOR PROPERTY ACCESS OR AT BUS STOPS

④

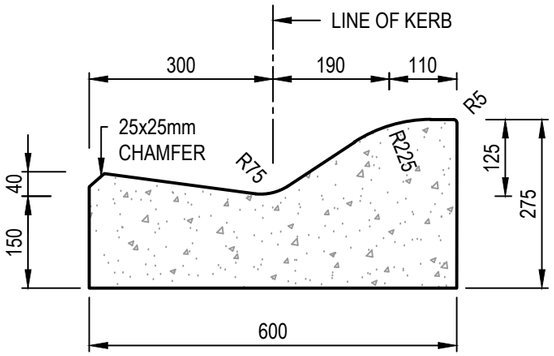


SEMI-MOUNTABLE KERB AND WATERTABLE

*NOT TO BE USED FOR PROPERTY ACCESS OR AT BUS STOPS

⑤

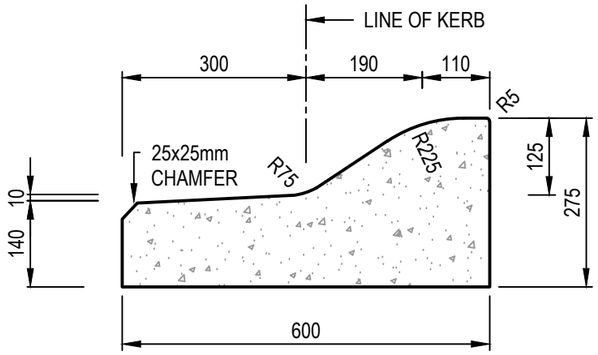


SEMI-MOUNTABLE KERB AND TRAY

*NOT TO BE USED FOR PROPERTY ACCESS OR AT BUS STOPS

⑥

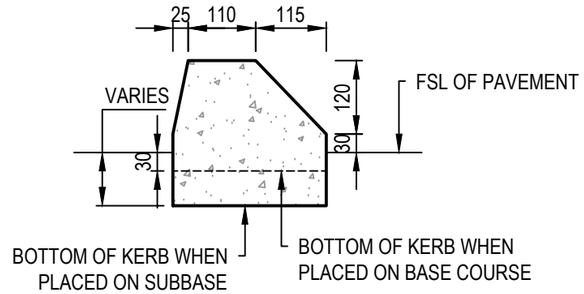


MEDIAN KERB

⑦

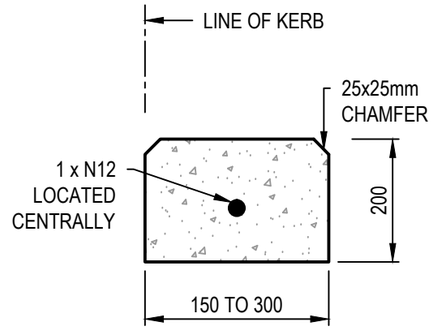


EDGE STRIP

⑧

## NOTES:

1. CONCRETE SHALL BE NORMAL CLASS N25 STANDARD STRENGTH GRADE COMPLYING WITH THE REQUIREMENTS OF AS. 1379.
2. BEDDING TO BE PM2 / 20 QG COMPACTED TO 96% MMDD TO AS1289 METHOD 5.2.1. BEDDING TO EXTEND MIN. 300mm BEHIND BACK OF KERB. THICKNESS MIN. 100mm TO MATCH EXISTING PAVEMENT SUBBASE, WHICHEVER IS GREATER. PM2 / 20 RG TO BE USED ONLY WHEN SPECIFICALLY APPROVED BY COUNCIL
3. CONCRETE TO BE SMOOTH TROWELLED FINISHED ON TRAY AND KERB.
4. CONCRETE SPONGE FINISHED ON LAYBACK.
5. SHRINKAGE CONTROL JOINTS (TOOLED JOINT) LOCATED AT 2500mm MAXIMUM SPACING. MIN. 50% OF SECTION AREA TO BE CUT. FINISHED WITH TOOLED JOINT 20mm DEPTH TO PRODUCE NEAT GROOVE NOT LESS THAN 5mm WIDE.
6. CONSTRUCTION JOINTS AS REQUIRED TO BE IN ACCORDANCE WITH AS 2876-2000.
7. LINE OF KERB IS USED TO DETERMINE CARRIAGEWAY WIDTHS.
8. WHERE ADJACENT PAVEMENT IS BLOCK PAVED OR CONCRETE, DELETE 25 x 25mm CHAMFER AND REPLACE WITH R5.
9. BACKFILL BEHIND KERB UNTIL FLUSH WITH COMPACTED APPROVED IN-SITU SITE MATERIAL OR PM2 / 20 QG COMPACTED TO 95% MMDD TO AS1289 METHOD 5.2.1.
10. COA = CITY OF ADELAIDE

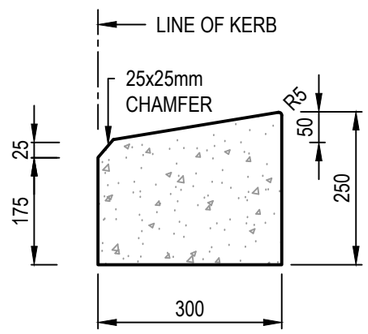


MOUNTABLE KERB

⑨

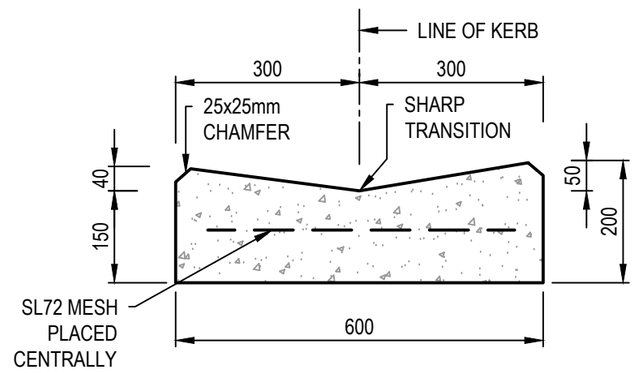


600mm WIDE SPOON DRAIN

⑩

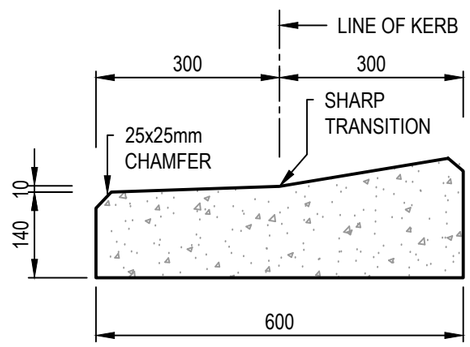


MOUNTABLE KERB AND TRAY

⑪

ALL MEASUREMENTS IN MILLIMETRES

| REV | DESCRIPTION | DATE | DES | DRW | APP |
|---|---|---|---|---|---|
| D | MINOR AMENDMENTS | 06.11.2018 | AF | AF | MDH |
| C | MINOR AMENDMENTS | 18.07.2017 | JZ | JC | DSL |
| B | ISSUED FOR REVIEW | 10.05.2016 | JZ | DL | DSL |
| A | ISSUED FOR REVIEW | 15.03.2016 | JZ | DL | DSL |

THIS PROJECT HAS BEEN ASSISTED BY THE LOCAL GOVERNMENT RESEARCH AND DEVELOPMENT SCHEME AND INSTITUTE OF PUBLIC WORKS ENGINEERING AUSTRALASIA

INFRASTRUCTURE GUIDELINES (SA)

SHEET TITLE

# TYPICAL RESIDENTIAL KERB PROFILES

SCALE 1:10 @ A3

DRAWING No. SD 100

REV D

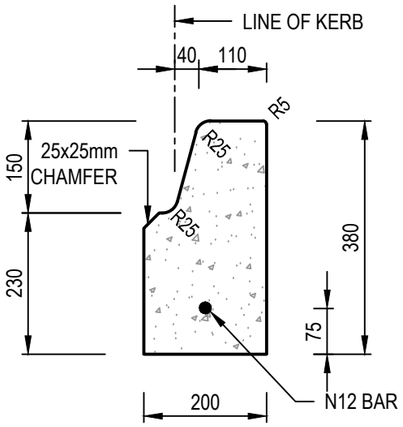


150mm BARRIER KERB ONLY
(INDUSTRIAL)
①

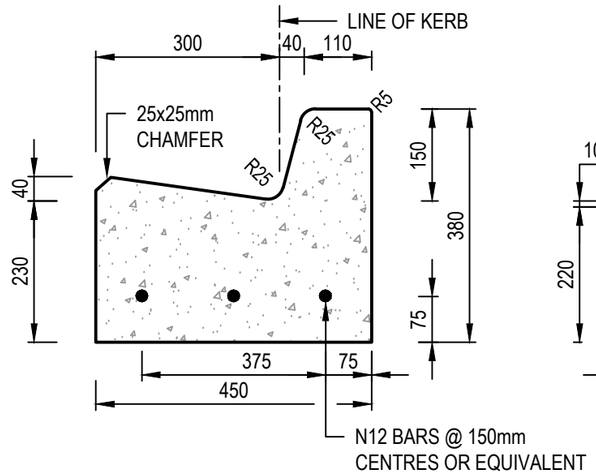


150mm BARRIER KERB AND WATER TABLE
(INDUSTRIAL)
②

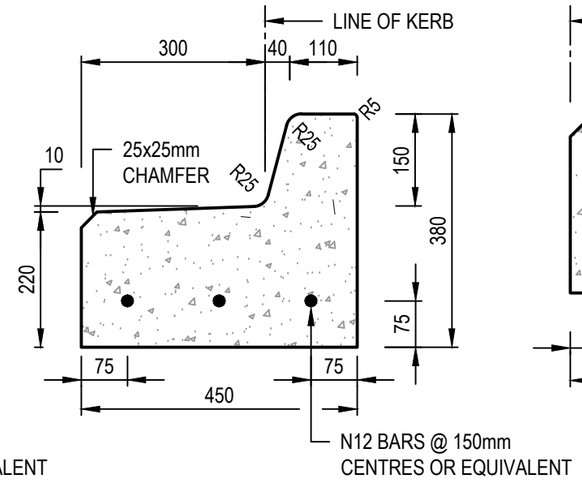


150mm BARRIER KERB AND TRAY
(INDUSTRIAL)
③

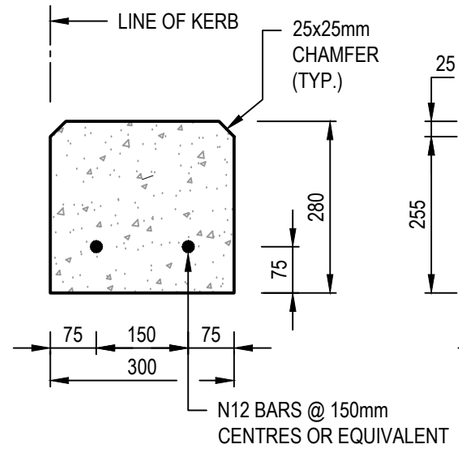


EDGE STRIP
(INDUSTRIAL)
④

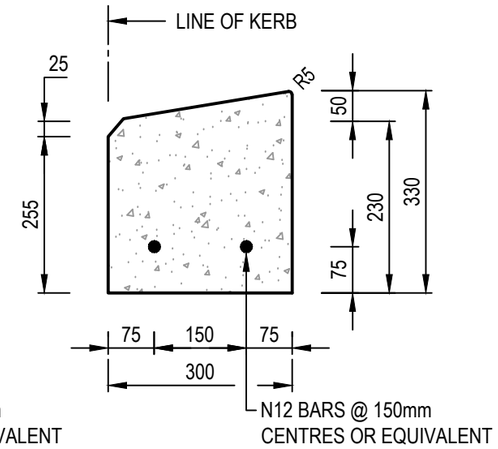


MOUNTABLE KERB
(INDUSTRIAL)
⑤

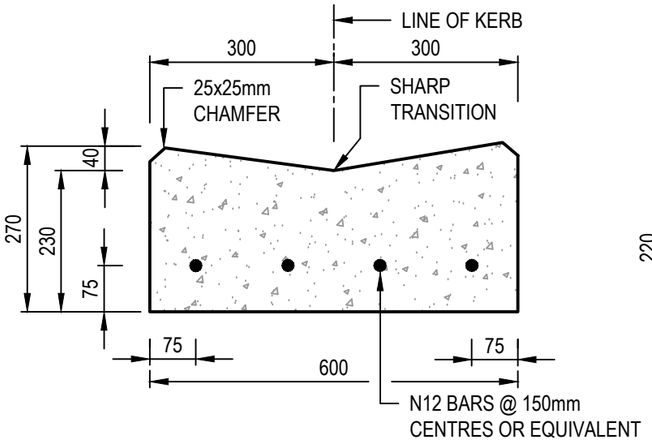


600mm WIDE SPOON DRAIN
(INDUSTRIAL)
⑥

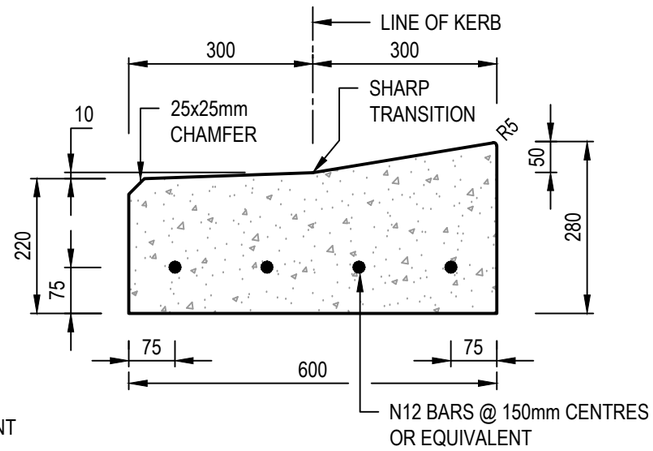


MOUNTABLE KERB AND TRAY
(INDUSTRIAL)
⑦

## NOTES:

1. REFER TYPICAL RESIDENTIAL KERB PROFILE DRAWING SD 100

ALL MEASUREMENTS IN MILLIMETRES

| REV | DESCRIPTION | DATE | DES | DRW | APP |
|---|---|---|---|---|---|
| D | MINOR AMENDMENTS | 06.11.2018 | AF | AF | MDH |
| C | MINOR AMENDMENTS | 18.07.2017 | JZ | JC | DSL |
| B | ISSUED FOR REVIEW | 10.05.2016 | JZ | DL | DSL |
| A | ISSUED FOR REVIEW | 15.03.2016 | JZ | DL | DSL |

THIS PROJECT HAS BEEN ASSISTED BY THE LOCAL GOVERNMENT RESEARCH AND DEVELOPMENT SCHEME AND INSTITUTE OF PUBLIC WORKS ENGINEERING AUSTRALASIA

INFRASTRUCTURE GUIDELINES (SA)

SHEET TITLE
TYPICAL INDUSTRIAL KERB PROFILES

SCALE
1:10 @ A3

DRAWING No.
SD 105

REV
D

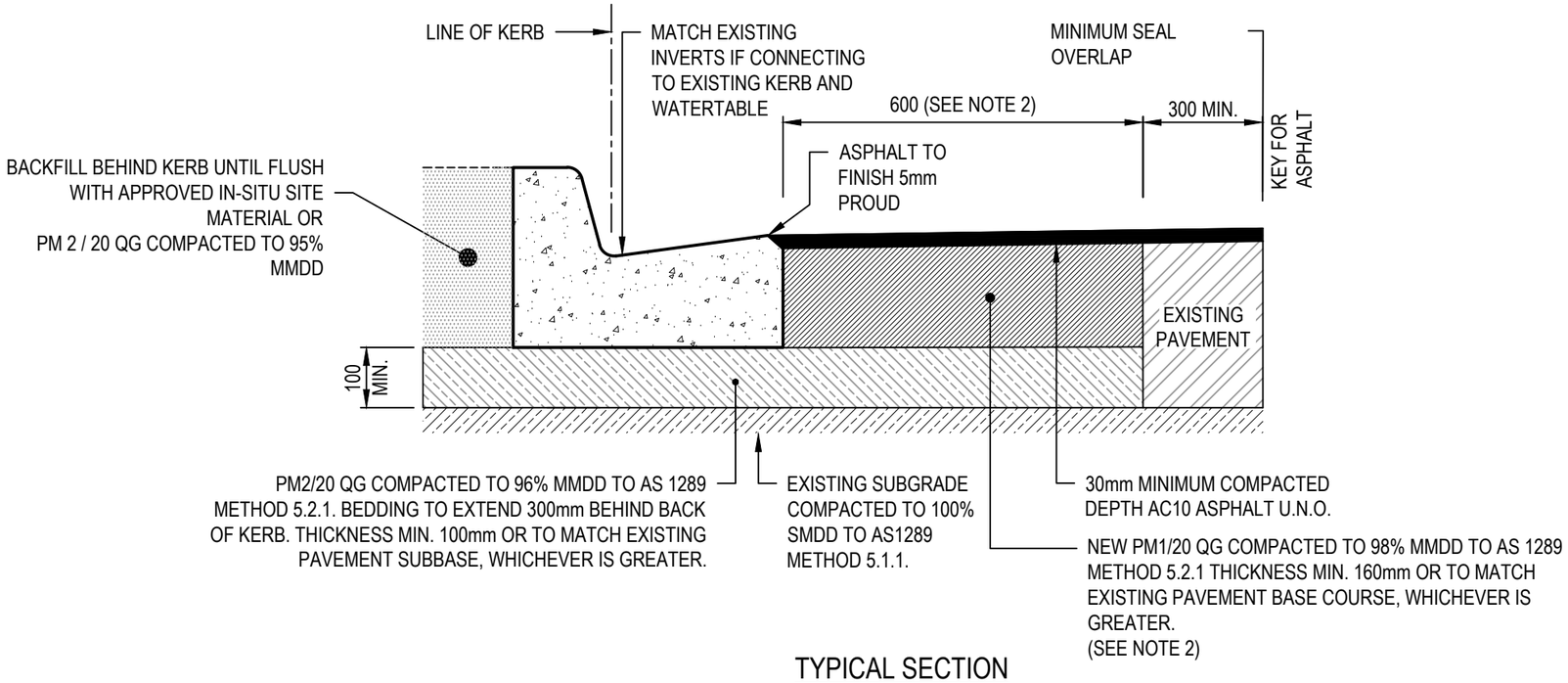


## TYPICAL SECTION

ALL MEASUREMENTS IN MILLIMETRES

## NOTES:

1. REFER TO SD 100 OR SD 105 FOR KERB DETAILS.
2. FOR WIDTH MINIMUM OF 100 TO 350mm USE CONTROLLED LOW STRENGTH MATERIAL (CLSM) INFILL.
3. PM 2 / 20 RG TO BE USED INSTEAD OF PM 2 / 20 QG ONLY WHEN SPECIFICALLY APPROVED BY COUNCIL.
4. REFER PAVEMENT DESIGN FOR PAVEMENT THICKNESS

| REV | DESCRIPTION | DATE | DES | DRW | APP |
|---|---|---|---|---|---|
| D | MINOR AMENDMENTS | 06.11.2018 | AF | AF | MDH |
| C | MINOR AMENDMENTS | 18.07.2017 | JZ | JC | DSL |
| B | ISSUED FOR REVIEW | 10.05.2016 | JZ | DL | DSL |
| A | ISSUED FOR REVIEW | 15.03.2016 | JZ | DL | DSL |

THIS PROJECT HAS BEEN ASSISTED BY THE LOCAL GOVERNMENT RESEARCH AND DEVELOPMENT SCHEME AND INSTITUTE OF PUBLIC WORKS ENGINEERING AUSTRALASIA

INFRASTRUCTURE GUIDELINES (SA)

SHEET TITLE
KERB & WATERTABLE INSTALLATION ABUTTING EXISTING PAVEMENT

SCALE
1:10 @ A3

DRAWING No.
SD 110

REV
D

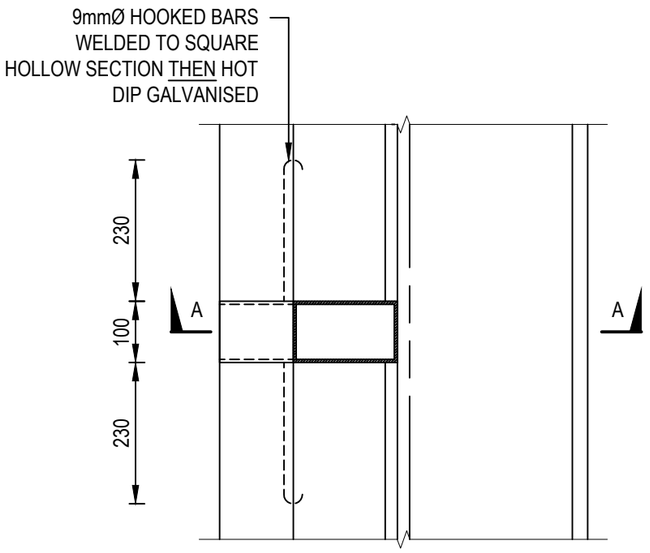


RESIDENTIAL STORMWATER OUTLET CONNECTION

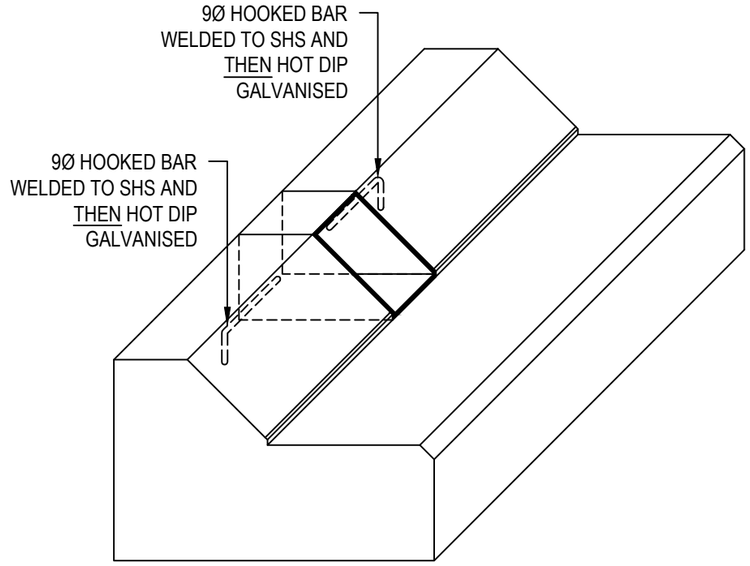


STORMWATER OUTLET DETAIL

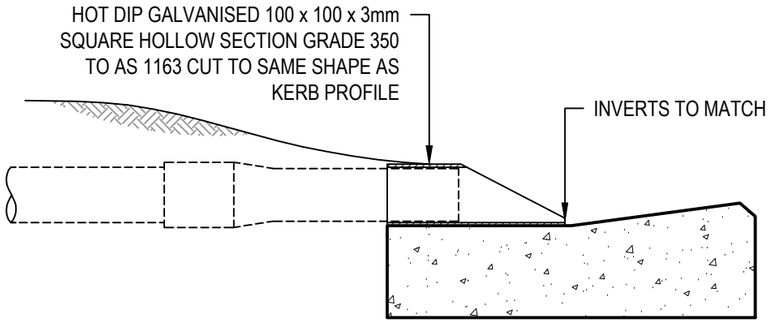


SECTION
A-A

PROVIDE ONE OUTLET PER 10m OF FRONTAGE
ON LOW SIDE OF LOT (UP TO 2 OUTLETS PER LOT)

ALL MEASUREMENTS IN MILLIMETRES

| REV | DESCRIPTION | DATE | DES | DRW | APP |
|---|---|---|---|---|---|
| D | MINOR AMENDMENTS | 06.11.2018 | AF | AF | MDH |
| C | MINOR AMENDMENTS | 18.07.2017 | JZ | JC | DSL |
| B | ISSUED FOR REVIEW | 10.05.2016 | JZ | DL | DSL |
| A | ISSUED FOR REVIEW | 15.03.2016 | JZ | DL | DSL |

THIS PROJECT HAS BEEN ASSISTED BY THE LOCAL GOVERNMENT RESEARCH AND DEVELOPMENT SCHEME AND INSTITUTE OF PUBLIC WORKS ENGINEERING AUSTRALASIA

INFRASTRUCTURE GUIDELINES (SA)

SHEET TITLE
STANDARD STORMWATER KERB OUTLET DETAILS - INSTALLED DURING CONSTRUCTION

SCALE
1:10 @ A3

DRAWING No.
SD 115

REV
D

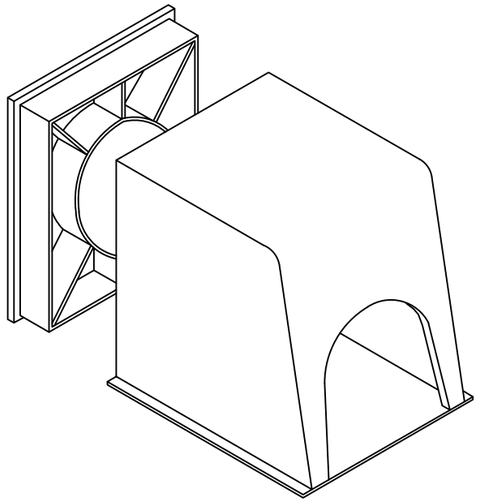

KERB ADAPTOR - UPRIGHT KERB

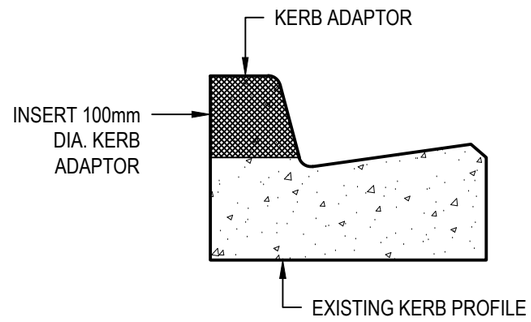


UPRIGHT KERB WITH KERB ADAPTOR
SECTIONAL VIEW

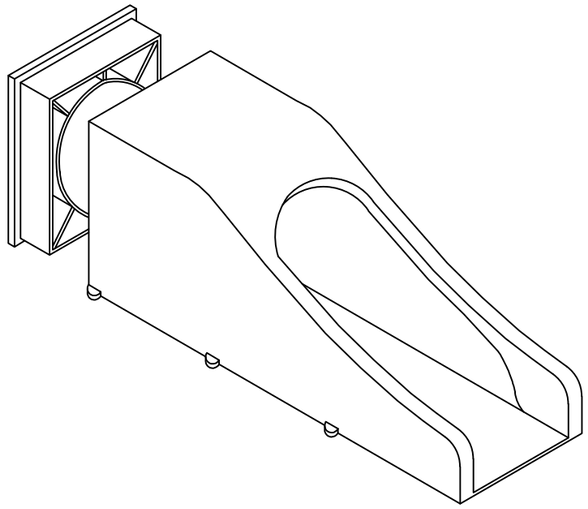

KERB ADAPTOR - SEMI MOUNTABLE KERB

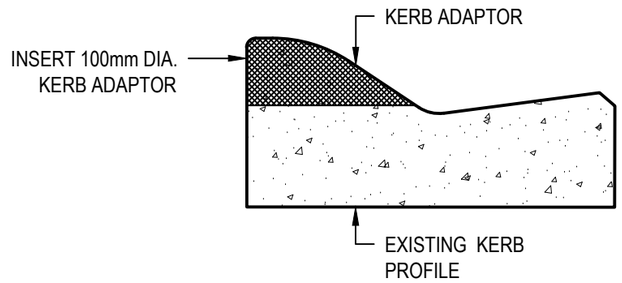


SEMI MOUNTABLE KERB WITH KERB ADAPTOR
SECTIONAL VIEW

NOTES:

1. ALL KERB ADAPTORS ARE TO BE AN APPROVED PROPRIETARY PRODUCT CONSTRUCTED FROM EITHER HEAVY DUTY UPVC OR HOT DIPPED GALVANIZED MILD STEEL.
2. KERB IS TO BE NEATLY SAW CUT & KERB ADAPTOR EPOXIED INTO POSITION.

ALL MEASUREMENTS IN MILLIMETRES

| REV | DESCRIPTION | DATE | DES | DRW | APP |
|---|---|---|---|---|---|
| B | ISSUED FOR REVIEW | 10.05.2016 | JZ | DL | DSL |
| A | ISSUED FOR REVIEW | 15.03.2016 | JZ | DL | DSL |

THIS PROJECT HAS BEEN ASSISTED BY THE LOCAL GOVERNMENT RESEARCH AND DEVELOPMENT SCHEME AND INSTITUTE OF PUBLIC WORKS ENGINEERING AUSTRALASIA

INFRASTRUCTURE GUIDELINES (SA)

SHEET TITLE
STORMWATER KERB OUTLET DETAILS - EXISTING KERB

SCALE 1:10 @ A3

DRAWING No. SD 120

REV B

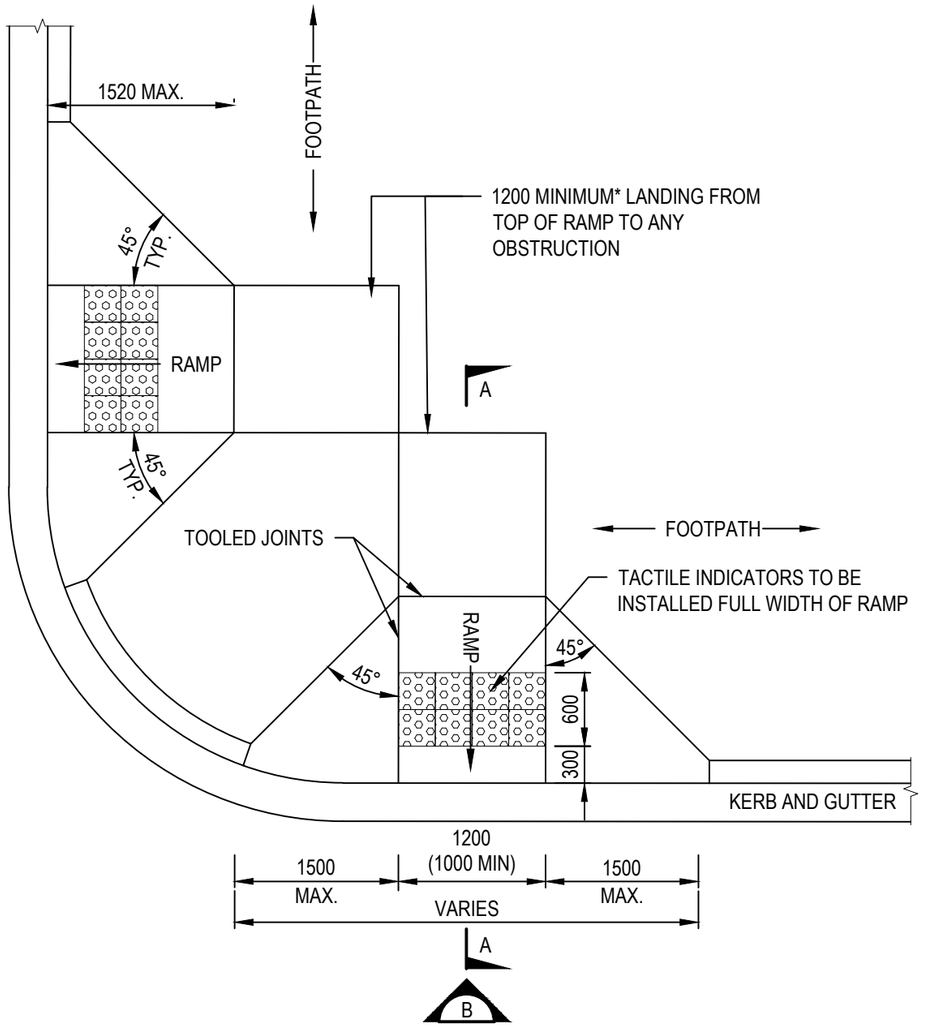


KERB RAMP PLAN
SCALE 1:50

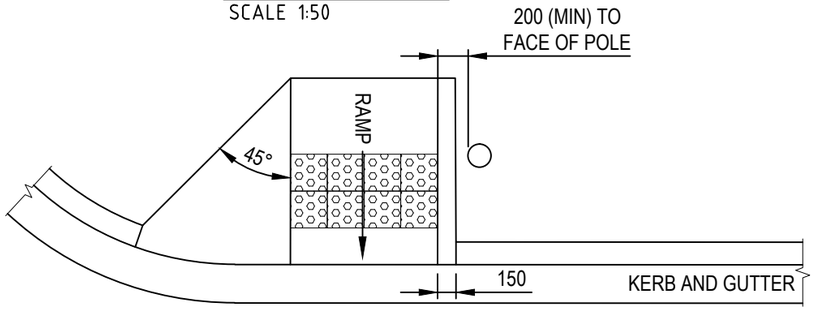


KERB RAMP WITH VERTICAL SIDE - PLAN
SCALE 1:50

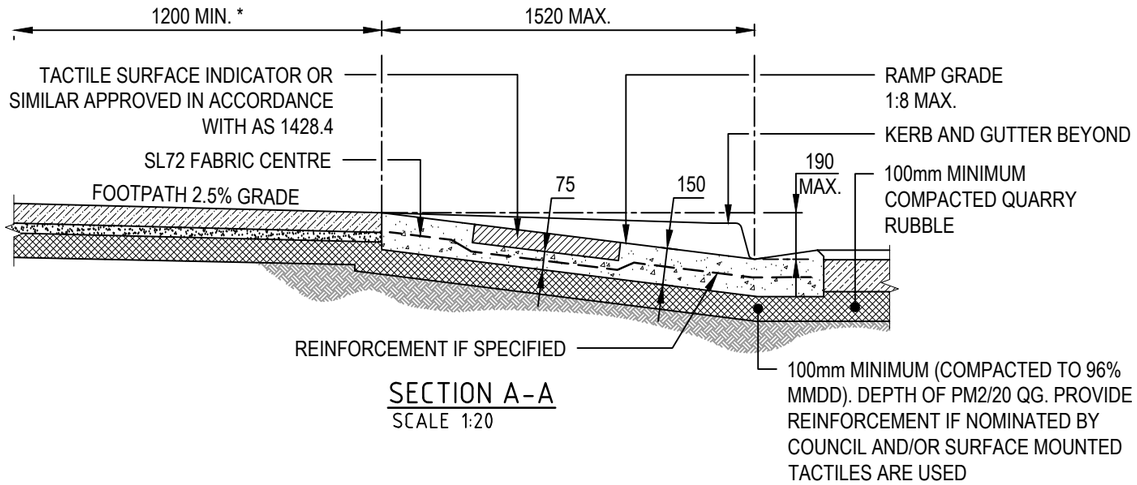


SECTION A-A
SCALE 1:20

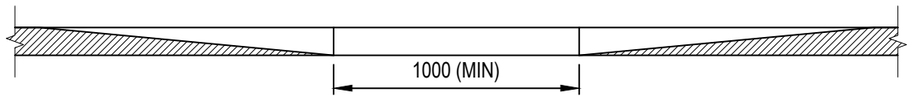


ELEVATION B
SCALE 1:20

* DENOTES MINIMUM DIMENSION. TO BE 1500 IF A TURN IN DIRECTION OF TRAVEL IS REQUIRED.

## NOTES:

1. RAMPS GIVING ACCESS TO ROADWAYS HAVING KERBS EACH SIDE SHALL BE PROVIDED IN PAIRS. ONE IN EACH FOOTWAY AND DIRECTLY OPPOSITE EACH OTHER.
2. RAMPS OR OPENINGS SHALL BE PROVIDED IN ISLANDS WHICH LIE ON THE ROUTE ACROSS THE ROAD. THE OPENING SHALL NOT BE LESS THAN 1000mm WIDE (120mm PREFERRED)
3. TOP AND BOTTOM KERB RAMPS SHALL HAVE A SHARP GRADIENT TRANSITION.
4. THE RAMP AND SLOPING SIDES SHALL BE SLIP RESISTANT WITH TACTILE SURFACE INDICATORS (CONTRASTING COLOUR), TYPE 'B' AND SHALL BE INSTALLED IN ACCORDANCE WITH AS 1428.4-2009.
5. CONCRETE GRADE SHALL BE N32 FOR KERB, GUTTERS AND RAMPS.
6. KERB RAMPS MUST CONFORM WITH AS1428.
7. KERB RAMP WINGS CAN BE STEEPENED AND A HAND RAIL PROVIDED IN LOCATIONS WHERE ACCESS FROM THE SIDES IS NOT POSSIBLE, OR ON CURVES.

ALL MEASUREMENTS IN MILLIMETRES

| REV | DESCRIPTION | DATE | DES | DRW | APP |
|---|---|---|---|---|---|
| D | MINOR AMENDMENTS | 06.11.2018 | AF | AF | MDH |
| C | MINOR AMENDMENTS | 18.07.2017 | JZ | JC | DSL |
| B | ISSUED FOR REVIEW | 10.05.2016 | JZ | DL | DSL |
| A | ISSUED FOR REVIEW | 15.03.2016 | JZ | DL | DSL |

THIS PROJECT HAS BEEN ASSISTED BY THE LOCAL GOVERNMENT RESEARCH AND DEVELOPMENT SCHEME AND INSTITUTE OF PUBLIC WORKS ENGINEERING AUSTRALASIA

INFRASTRUCTURE GUIDELINES (SA)

SHEET TITLE
KERB RAMP SPECIFICATIONS
SHEET 1 OF 2

SCALE
AS SHOWN @ A3

DRAWING No. SD 125

REV D

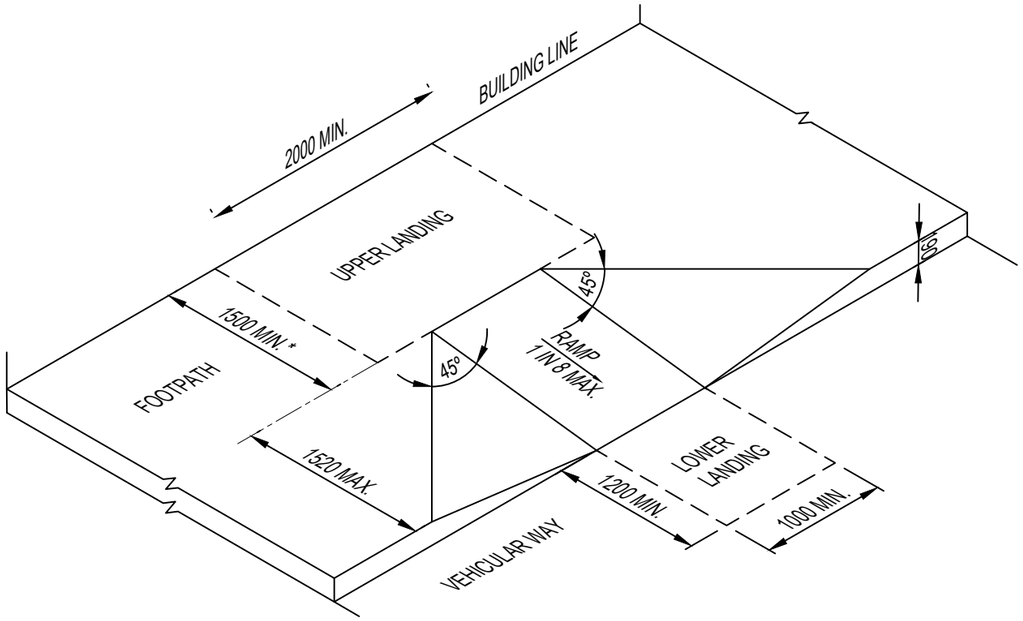


## KERB RAMP ISOMETRIC VIEW

SCALE NTS

* WHERE THERE IS NO TURN INVOLVED, TOP LANDING MAY BE REDUCED TO 1200mm MIN. IN LENGTH

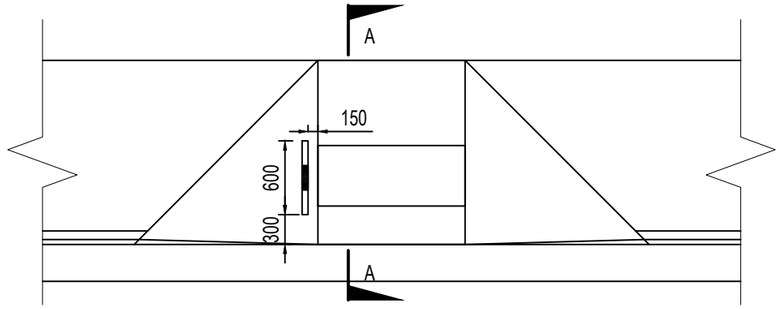


## KERB RAMP HAND RAIL DETAIL

SCALE 1:50

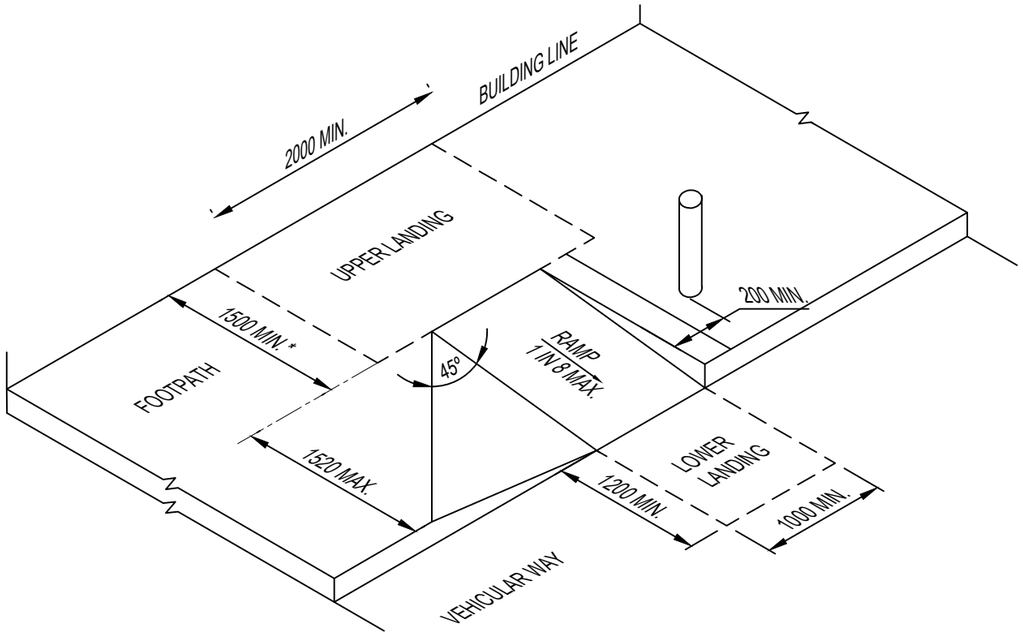


## KERB RAMP WITH VERTICAL SIDE - ISOMETRIC VIEW

SCALE NTS

* WHERE THERE IS NO TURN INVOLVED, TOP LANDING MAY BE REDUCED TO 1200mm MIN. IN LENGTH

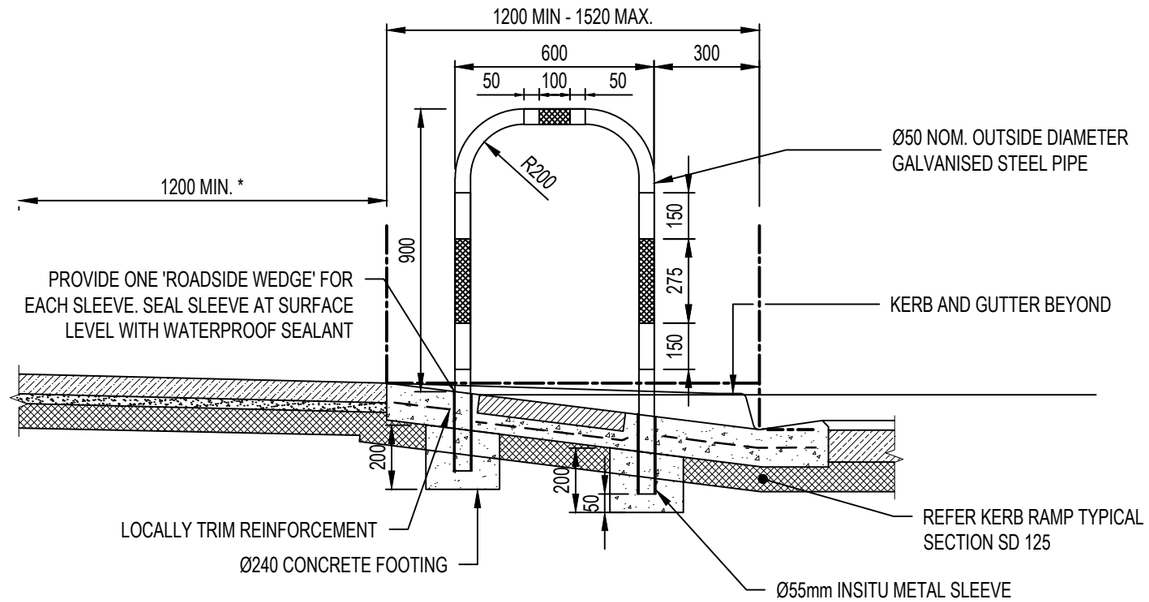


## SECTION A - A

SCALE 1:20

## NOTE:

1. REFER SD 125 FOR DETAILS

ALL MEASUREMENTS IN MILLIMETRES

| REV | DESCRIPTION | DATE | DES | DRW | APP |
|---|---|---|---|---|---|
| C | MINOR AMENDMENTS | 18.07.2017 | JZ | JC | DSL |
| B | ISSUED FOR REVIEW | 10.05.2016 | JZ | DL | DSL |
| A | ISSUED FOR REVIEW | 15.03.2016 | JZ | DL | DSL |

THIS PROJECT HAS BEEN ASSISTED BY THE LOCAL GOVERNMENT RESEARCH AND DEVELOPMENT SCHEME AND INSTITUTE OF PUBLIC WORKS ENGINEERING AUSTRALASIA

INFRASTRUCTURE GUIDELINES (SA)

SHEET TITLE

KERB RAMP SPECIFICATIONS
SHEET 2 OF 2

SCALE
NTS @ A3

DRAWING No.
SD 130

REV
C

## LEGEND:

EXPANSION JOINT — EJ

CONTRACTION JOINTS — — — —

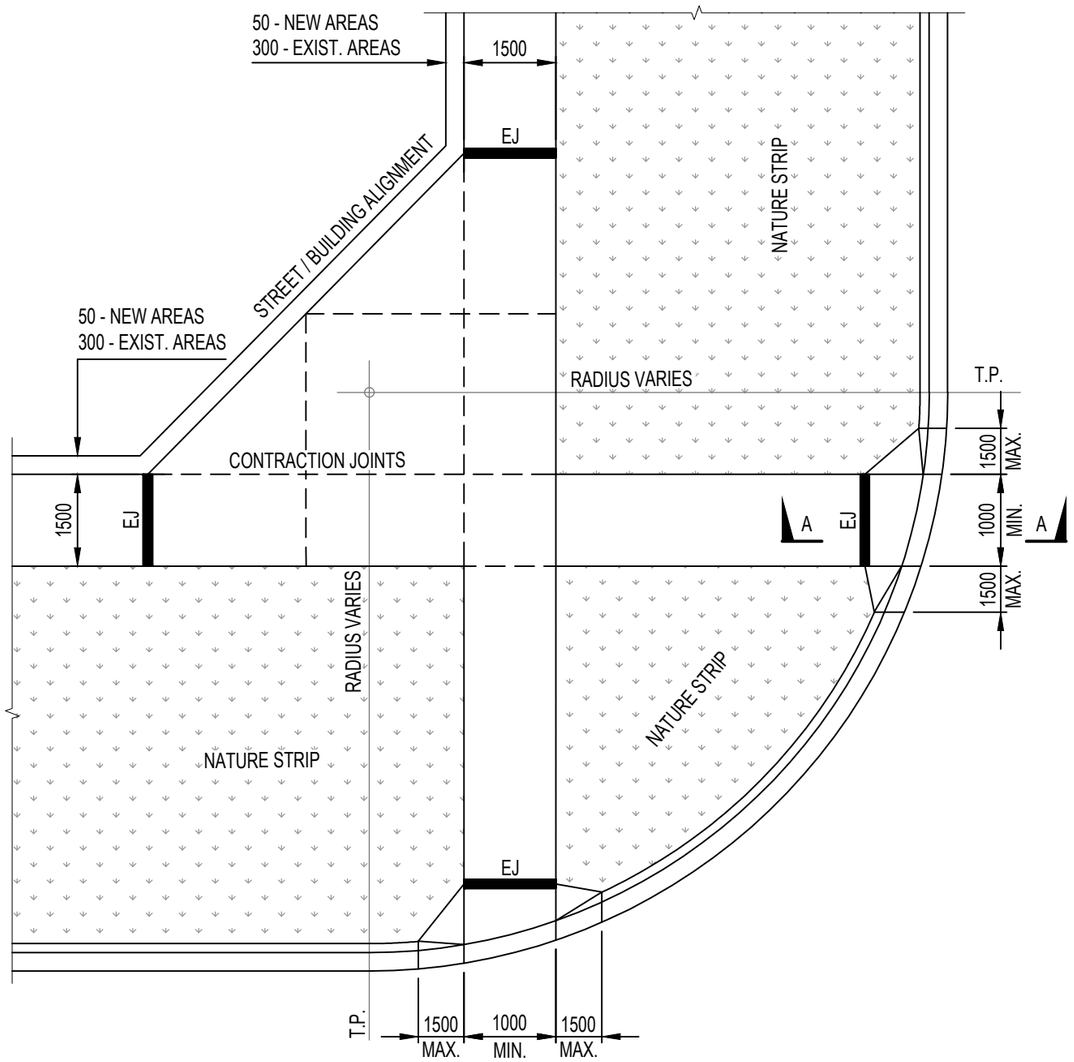


TYPICAL ARRANGEMENT PLAN
SCALE 1:100

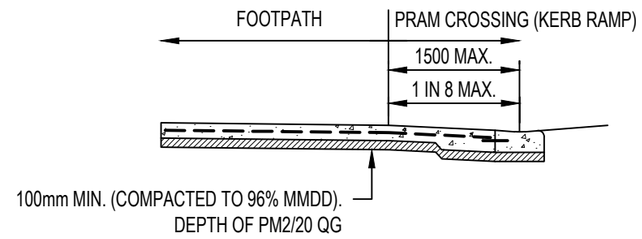


SECTION A-A
SCALE NTS

NOTE:
KERB RAMP DETAILS. REFER TO SD 125 AND SD 130.

## NOTES:

1. LOCATION OF CROSSINGS TO BE CASE BY CASE & TO BE APPROVED BY COUNCIL.
2. CROSSING GENERALLY TO BE LOCATED AT TANGENT POINTS.
3. CONCRETE TO BE SMOOTH TROWELLED FINISH ON TRAY.
4. CONCRETE TO BE FINE SOFT HAIR BROOM FINISH ON LAYBACK.
5. MINIMUM CONCRETE STRENGTH TO BE 32 MPA.
6. BEDDING TO BE COMPACTED PM2/20 QG 100mm MIN. THICKNESS.
7. IF SPLAY IS NOT REQUIRED FOOTPATH IS TO CONTINUE THROUGH TO LAYBACKS.
8. TGI'S (TILES), WHERE REQUIRED, ARE TO BE TO BE INSTALLED TO AS1428.4

ALL MEASUREMENTS IN MILLIMETRES

| REV | DESCRIPTION | DATE | DES | DRW | APP |
|---|---|---|---|---|---|
| B | ISSUED FOR REVIEW | 18.07.2017 | JZ | DL | DSL |
| B | ISSUED FOR REVIEW | 10.05.2016 | JZ | DL | DSL |
| A | ISSUED FOR REVIEW | 15.03.2016 | JZ | DL | DSL |

THIS PROJECT HAS BEEN ASSISTED BY THE LOCAL GOVERNMENT RESEARCH AND DEVELOPMENT SCHEME AND INSTITUTE OF PUBLIC WORKS ENGINEERING AUSTRALASIA

INFRASTRUCTURE GUIDELINES (SA)

SHEET TITLE
TYPICAL PEDESTRIAN CROSSING ARRANGEMENT DETAIL

SCALE
AS SHOWN @ A3

DRAWING No. SD 200

REV C

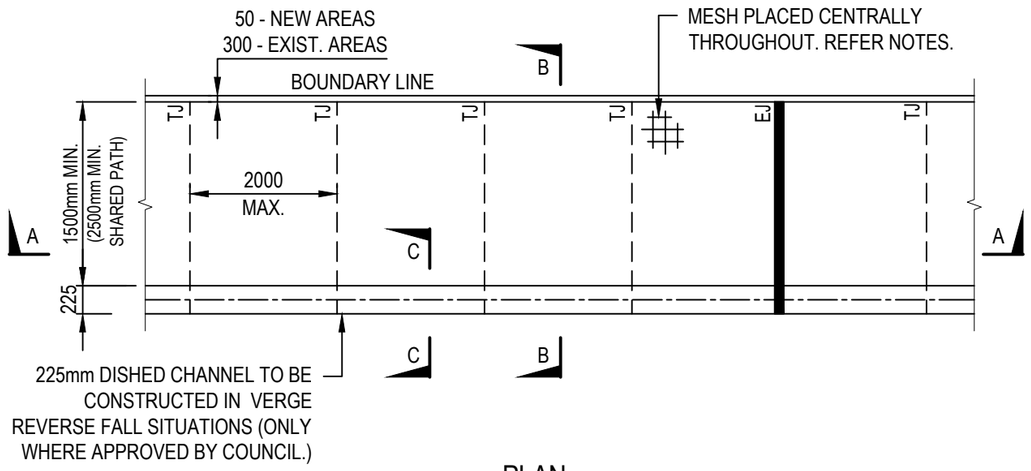


PLAN

## LEGEND:

| | |
|---|---|
| EXPANSION JOINT @ 12m CTS. MAX. | EJ |
| CONTRACTION/TOOLED JOINTS @ 2000mm CTS. MAX. | TJ |
| ISOLATION JOINT | IJ |

## NOTES:

1. 'D' = DEPTH OF CONCRETE FOOTPATH
   - EXISTING RESIDENTIAL: D = 100mm 25MPa WITH SL62.
   - NEW RESIDENTIAL: D = 125mm 25MPa WITH SL72.
   - EXPOSED AGGREGATE D = 125mm 32MPa WITH SL72
   - COMMERCIAL/INDUSTRIAL: D = 150mm 32MPa WITH SL82 (TOP) 50 COVER.
2. REFER SD 210 FOR DETAILS OF JOINT TYPES.
3. ALIGNMENT OF FOOTPATH TO BE SHOWN ON DESIGN PLANS AND APPROVED BY COUNCIL.

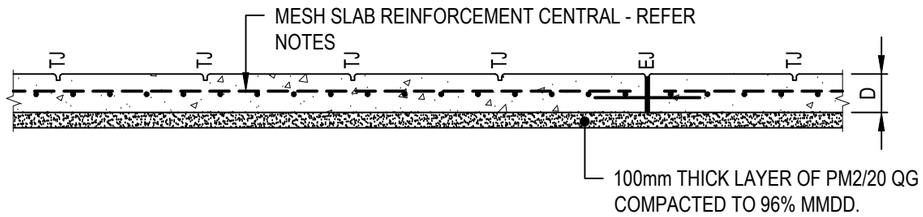


SECTION A-A
TYPICAL 125mm & 150mm FOOTPATH SECTION

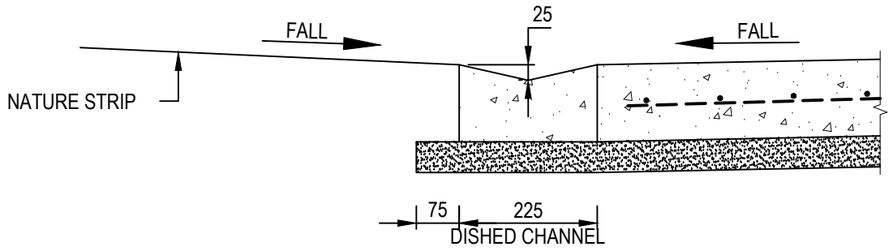


SECTION C-C
(ONLY TO BE USED BY COUNCIL APPROVAL)

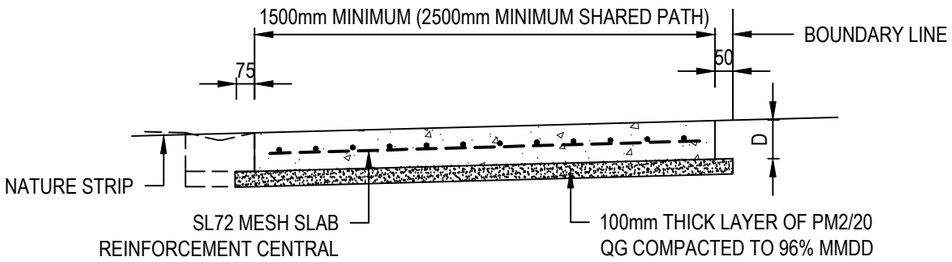


SECTION B-B
TYPICAL 125mm & 150mm FOOTPATH SECTION

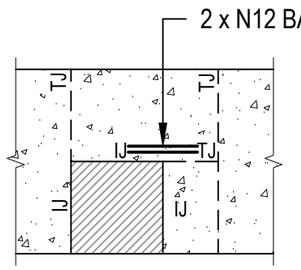


PIT / ACCESS HOLE AT EDGE (PLAN)

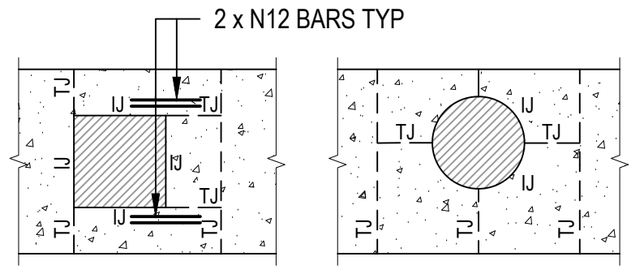


PIT / ACCESS HOLE NOT AT EDGE (PLAN)

ALL MEASUREMENTS IN MILLIMETRES

| REV | DESCRIPTION | DATE | DES | DRW | APP |
|---|---|---|---|---|---|
| D | MINOR AMENDMENTS | 06.11.2018 | AF | AF | MDH |
| C | MINOR AMENDMENTS | 18.07.2017 | JZ | DL | DSL |
| B | ISSUED FOR REVIEW | 10.05.2016 | JZ | DL | DSL |
| A | ISSUED FOR REVIEW | 15.03.2016 | JZ | DL | DSL |

THIS PROJECT HAS BEEN ASSISTED BY THE LOCAL GOVERNMENT RESEARCH AND DEVELOPMENT SCHEME AND INSTITUTE OF PUBLIC WORKS ENGINEERING AUSTRALASIA

INFRASTRUCTURE GUIDELINES (SA)

SHEET TITLE
TYPICAL CONCRETE FOOTPATH DETAIL - SHEET 1 0F 2

SCALE
NTS @ A3

DRAWING No.
SD 205

REV
D

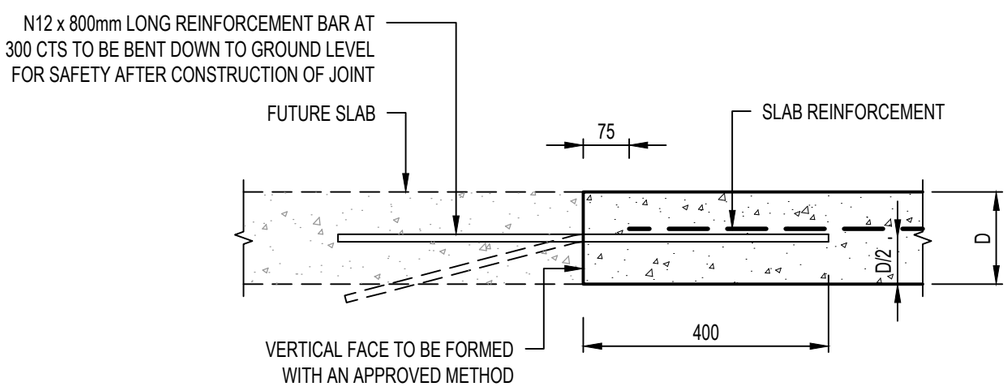


TYPICAL FUTURE CONSTRUCTION JOINT

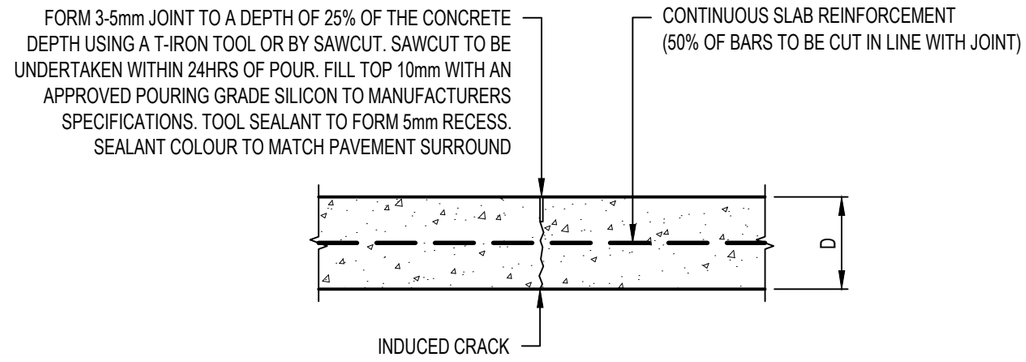


TYPICAL CONTRACTION / TOOLED JOINT

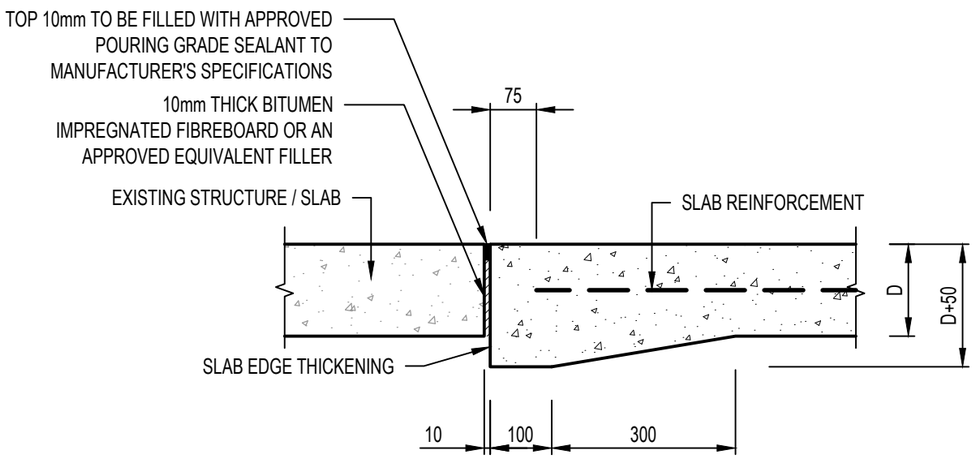


TYPICAL ISOLATION JOINT SECTION

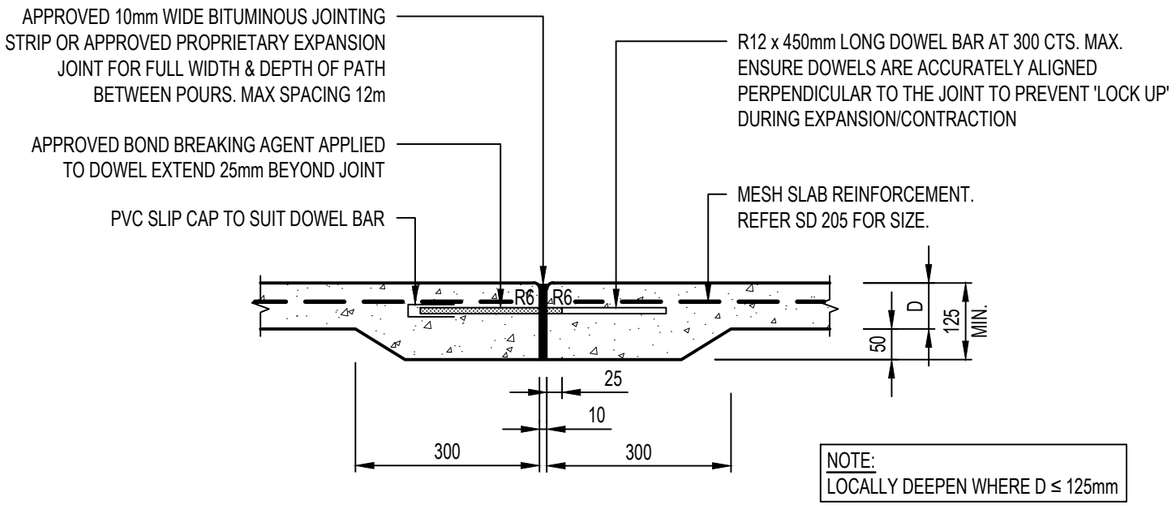


NOTE:
LOCALLY DEEPEN WHERE D ≤ 125mm

TYPICAL FOOTPATH EXPANSION JOINT - SECTION

## NOTE:

1. PROPRIETARY EXPANSION JOINTS SUCH AS TRIPSTOP CAN BE USED WITH COUNCIL APPROVAL IN REACTIVE SOILS OR WHERE TREE ROOTS MAY AFFECT PATHS.

ALL MEASUREMENTS IN MILLIMETRES

| REV | DESCRIPTION | DATE | DES | DRW | APP |
|---|---|---|---|---|---|
| C | MINOR AMENDMENTS | 18.07.2017 | JZ | JC | DSL |
| B | ISSUED FOR REVIEW | 10.05.2016 | JZ | DL | DSL |
| A | ISSUED FOR REVIEW | 15.03.2016 | JZ | DL | DSL |

THIS PROJECT HAS BEEN ASSISTED BY THE LOCAL GOVERNMENT RESEARCH AND DEVELOPMENT SCHEME AND INSTITUTE OF PUBLIC WORKS ENGINEERING AUSTRALASIA

INFRASTRUCTURE GUIDELINES (SA)

SHEET TITLE
TYPICAL CONCRETE FOOTPATH DETAIL
SHEET 2 OF 2

SCALE
1:10 @ A3

DRAWING No.
SD 210

REV
C

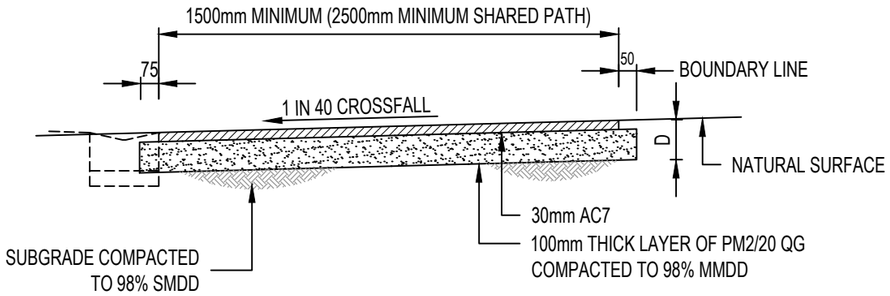


TYPICAL ASPHALT FOOTPATH SECTION

ALL MEASUREMENTS IN MILLIMETRES

NOTES:

1. 'D' = DEPTH OF ASPHALT FOOTPATH TYPICAL ASPHALT FOOTPATH DEPTH 'D'= 130mm TYPICAL 'D' MAY VARY DEPENDANT ON SUBGRADE CBR AND POSSIBLE MAINTENANCE OR EMERGENCY VEHICLE TRAFFIC ACCESS.

| REV | DESCRIPTION | DATE | DES | DRW | APP |
|---|---|---|---|---|---|
| C | MINOR AMENDMENTS | 18.07.2017 | JZ | JC | DSL |
| B | ISSUED FOR REVIEW | 10.05.2016 | JZ | DL | DSL |
| A | ISSUED FOR REVIEW | 15.03.2016 | JZ | DL | DSL |

THIS PROJECT HAS BEEN ASSISTED BY THE LOCAL GOVERNMENT RESEARCH AND DEVELOPMENT SCHEME AND INSTITUTE OF PUBLIC WORKS ENGINEERING AUSTRALASIA

INFRASTRUCTURE GUIDELINES (SA)

SHEET TITLE
TYPICAL HOT MIX ASPHALT FOOTPATH

SCALE
NTS @ A3

DRAWING No.
SD 215

REV
C

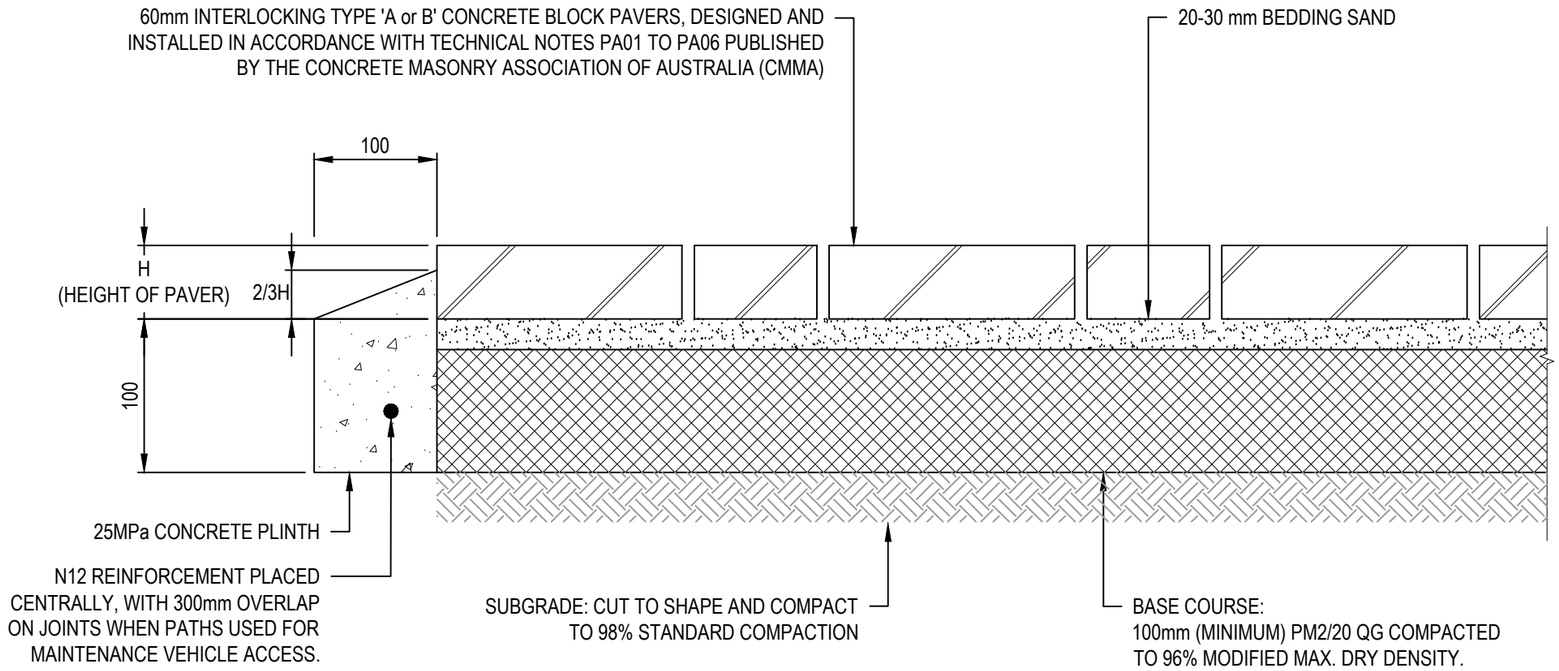


## SECTION THROUGH EDGE OF FOOTPATH

SCALE 1:5

## NOTES:

1. CONCRETE PLINTH TO BE USED WHERE NOT BACK OF KERB, OR BOTH SIDES OF FOOTPATH WHEN NOT BACK OF KERB OR AGAINST FIXED EDGE.
2. MATERIALS AND WORKMANSHIP SHALL BE IN ACCORDANCE WITH THE RELEVANT PUBLICATION OF THE CONCRETE MASONRY ASSOCIATION OF AUSTRALIA AND SHALL BE IN ACCORDANCE WITH BEST TRADE PRACTICE.
3. PAVING BLOCKS TO BE LAID IN 90° HERRINGBONE PATTERN WITH HEADER COURSE UP TO THE CONCRETE PLINTH OR AS SPECIFIED.
4. BLOCKS SHALL BE CONCRETE INTERLOCKING. COLOUR AND STYLE TO BE NOMINATED ON DRAWING APPROVED BY COUNCIL. ALL JOINTS TO BE FILLED WITH SUPERSAND/OR PAVELOCK SAND.
5. ALL CUTTING OF PAVERS TO BE WITH MASONRY SAW ONLY.
6. CLAY PAVERS OR OTHER NON INTERLOCKING PAVERS ARE SUBJECT TO COUNCIL APPROVAL BASED ON PERFORMANCE REQUIREMENTS INCLUDING SLIP RESISTANCE AND STRENGTH.

ALL MEASUREMENTS IN MILLIMETRES

| REV | DESCRIPTION | DATE | DES | DRW | APP |
|---|---|---|---|---|---|
| D | MINOR AMENDMENTS | 06.11.2018 | AF | AF | MDH |
| C | MINOR AMENDMENTS | 18.07.2017 | JZ | JC | DSL |
| B | ISSUED FOR REVIEW | 10.05.2016 | JZ | DL | DSL |
| A | ISSUED FOR REVIEW | 15.03.2016 | JZ | DL | DSL |

THIS PROJECT HAS BEEN ASSISTED BY THE LOCAL GOVERNMENT RESEARCH AND DEVELOPMENT SCHEME AND INSTITUTE OF PUBLIC WORKS ENGINEERING AUSTRALASIA

INFRASTRUCTURE GUIDELINES (SA)

SHEET TITLE
BLOCK PAVED FOOTPATH

SCALE
1:5 @ A3

DRAWING No.
SD 220

REV
D

## LEGEND:

EXPANSION JOINT — EJ

TOOLED JOINTS (REFER TO SD 210) — TJ

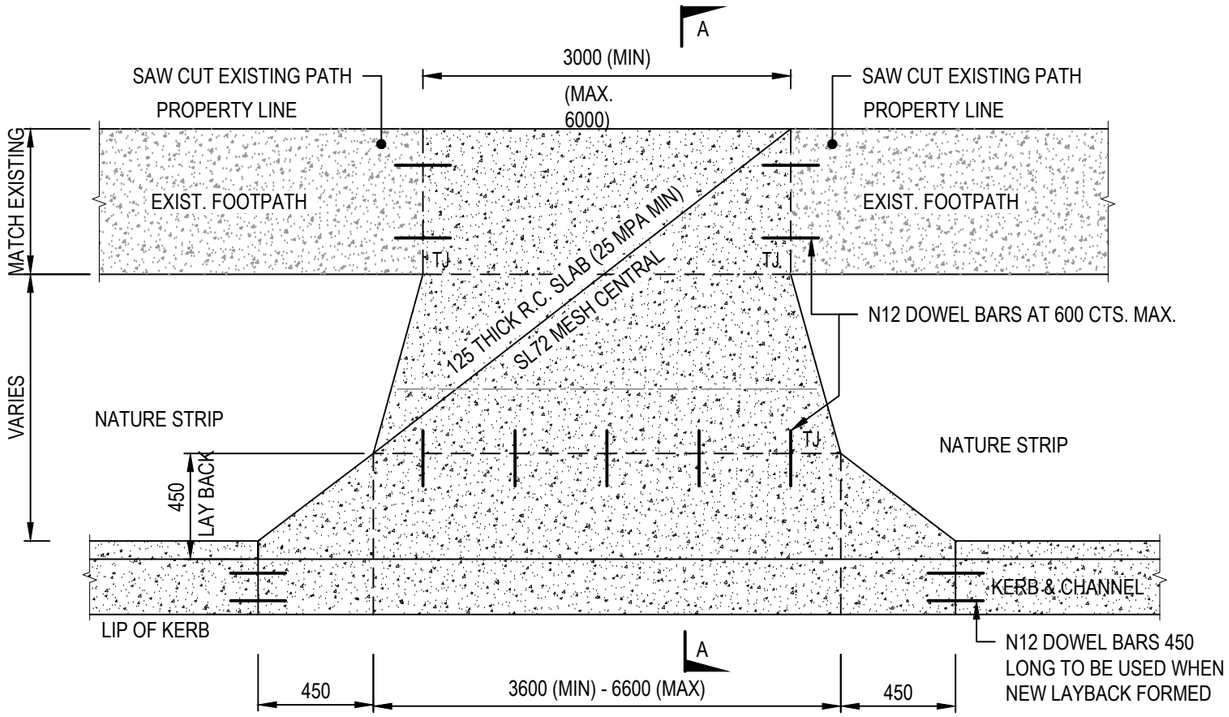


PLAN

## NOTES:

1. THIS DRAWING DETAILS DIMENSIONS FOR STANDARD RESIDENTIAL CROSSINGS ONLY.
2. CROSSING WIDTHS EXCEEDING THE MAXIMUM ALLOWABLE WILL REQUIRE APPLICATION FOR SPECIAL CONSIDERATION.
3. JOINTS AND DOWEL BARS ARE REQUIRED ON EITHER SIDE OF THE CROSSING AT THE INTERFACE WITH THE CONCRETE FOOTPATH. PROVISION SHALL BE MADE IN EXISTING CONCRETE SECTIONS BY DRILLING HOLES TO A MINIMUM DEPTH OF 150mm AND INSERTING R12 X 300mm LONG DOWEL BARS.
4. AN APPROVED JOINT FILLER SHALL BE PLACED ON EITHER SIDE OF THE CROSSING AGAINST FOOTPATH SLABS. DOWEL BARS ARE TO HAVE AN APPROVED BOND BREAKER APPLIED TO THE END OF THE BAR INSERTED INTO THE EXISTING CONCRETE FOOTPATH SECTIONS REFER SD210.
5. ADDITIONAL TOOLED JOINT REQUIRED IF DISTANCE FROM BACK OF KERB TO FOOTPATH IS GREATER THAN 3000 AND SHALL BE PLACED AT THE MIDPOINT OF THE DISTANCE.
6. THE MAXIMUM NUMBER OF CROSSINGS, WHERE ANY CROSSING EXCEEDS 3.6 METRES WIDTH, SHALL BE ONE (1) CROSSING WITH THE MAXIMUM WIDTH OF THAT CROSSING TO BE 6.6 METRES. CROSSINGS TO ADJACENT PROPERTIES SHALL BE EITHER FULLY COMBINED, AND OF MAXIMUM WIDTH OF 6.6 METRES, OR ELSE HAVE A MINIMUM SEPARATION OF 9 METRES..
7. FOOTPATHS OF 100mm THICKNESS ARE ACCEPTABLE ONLY WHERE THE LOTS ARE DEVELOPED ALREADY AND THE RISK OF SITE CONSTRUCTION DAMAGE IS NEGLIGIBLE. WHERE GREENFIELD SITES AND FUTURE HOUSING IS STILL TO BE DONE, THEN THE DEPTH OF THE FOOTPATH SHALL BE 125mm THROUGHOUT.
8. IF REVERSE FALL IS REQUIRED, DESIGN OF VEHICLE CROSSOVER TO BE ON A SITE SPECIFIC BASIS.
9. LOCATION AND DEPTH OF ANY UNDERGROUND SERVICES WITHIN FOOTWAY AREA MUST BE ESTABLISHED BEFORE COMMENCEMENT OF EXCAVATION.
10. UNDERTAKE A 'DIAL BEFORE YOU DIG' SEARCH (PH: 1100) TO LOCATE SERVICES PRIOR TO COMMENCING EXCAVATION.
11. TRANSITION AREA TO CONFORM TO AS2890.1. ANY CHANGES OF GRADE GREATER THAN 12.5% TO BE CHECKED USING THE TEMPLATE IN APPENDIX C AS2890.1
12. A MINIMUM CLEARANCE OF 1m MUST BE ACHIEVED FROM THE DRIVEWAY EDGE TO ANY STREET ASSET. THIS INCLUDES STREET TREES, LIGHT POLES, SIDE ENTRY PITS, PEDESTRIAN RAMPS AND STOBIE POLES.

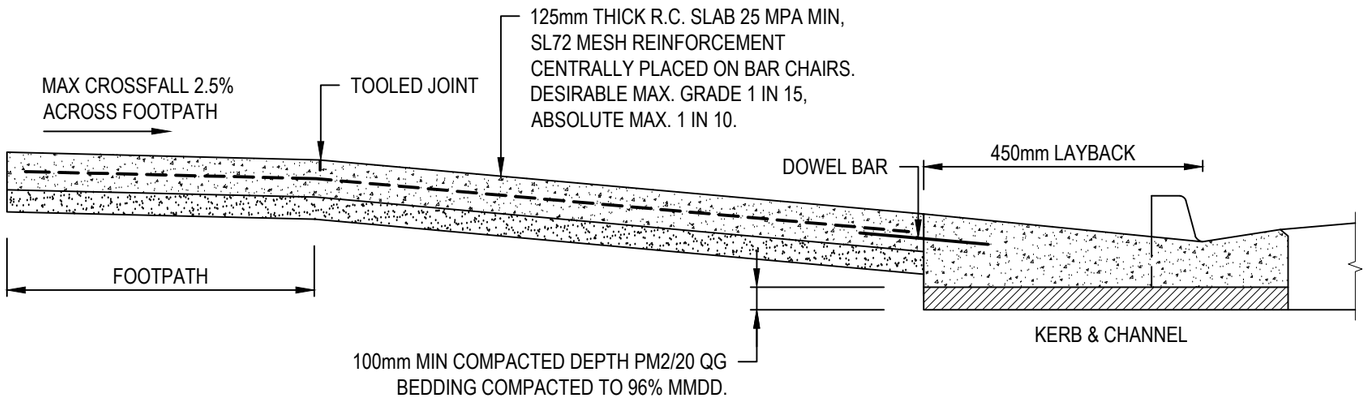


SECTION A-A

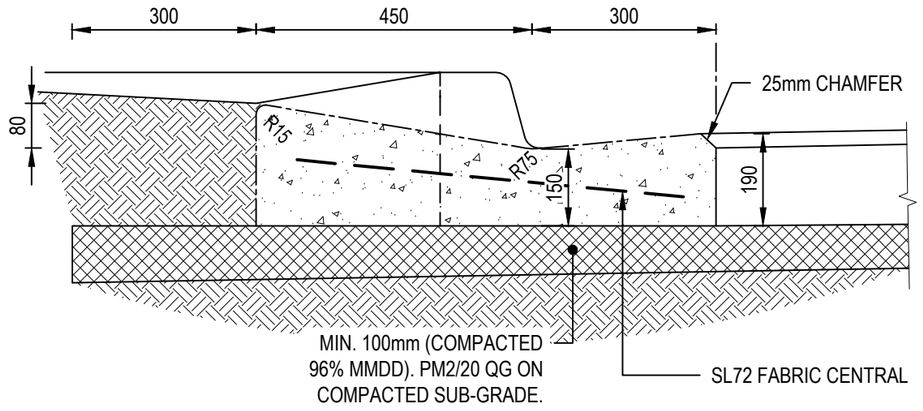


SECTIONAL VIEW OF RESIDENTIAL KERB & LAYBACK

ALL MEASUREMENTS IN MILLIMETRES

| REV | DESCRIPTION | DATE | DES | DRW | APP |
|---|---|---|---|---|---|
| D | MINOR AMENDMENTS | 06.11.2018 | AF | AF | MDH |
| C | MINOR AMENDMENTS | 17.07.2017 | JZ | JC | DSL |
| B | ISSUED FOR REVIEW | 10.05.2016 | JZ | DL | DSL |
| A | ISSUED FOR REVIEW | 15.03.2016 | JZ | DL | DSL |

THIS PROJECT HAS BEEN ASSISTED BY THE LOCAL GOVERNMENT RESEARCH AND DEVELOPMENT SCHEME AND INSTITUTE OF PUBLIC WORKS ENGINEERING AUSTRALASIA

INFRASTRUCTURE GUIDELINES (SA)

SHEET TITLE

RETROFIT RESIDENTIAL VEHICLE CROSSING DETAIL

SCALE: NTS @ A3

DRAWING No.: SD 225

REV: D

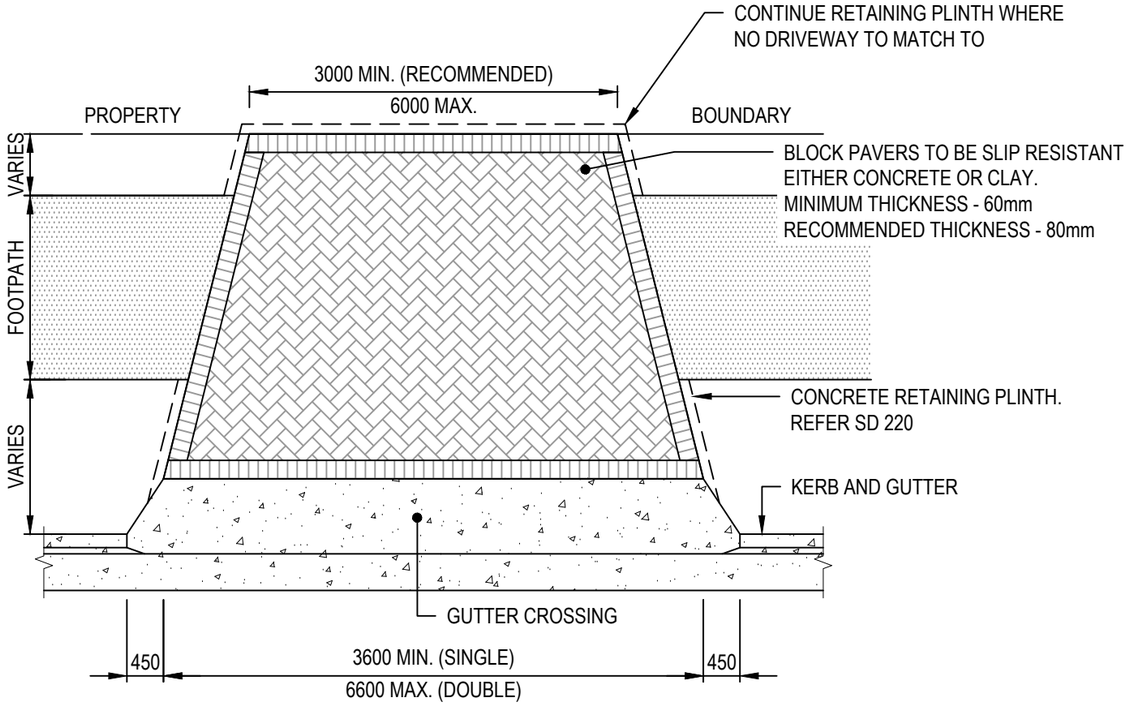


## PLAN OF BLOCK PAVED VEHICLE CROSS-OVER

SCALE 1:50

## NOTES:

1. TO BE READ IN CONJUNCTION DRAWING SD 225.
2. REFER ALSO TO NOTES ON DRAWING SD 225.

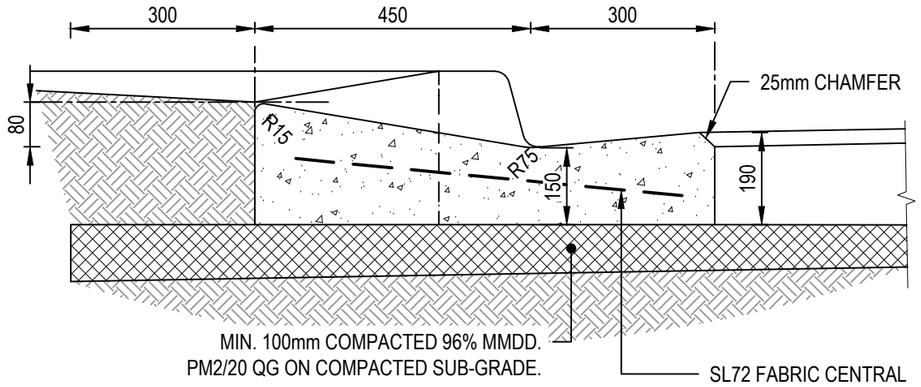


## SECTIONAL VIEW OF RESIDENTIAL KERB & LAYBACK

SCALE 1:10

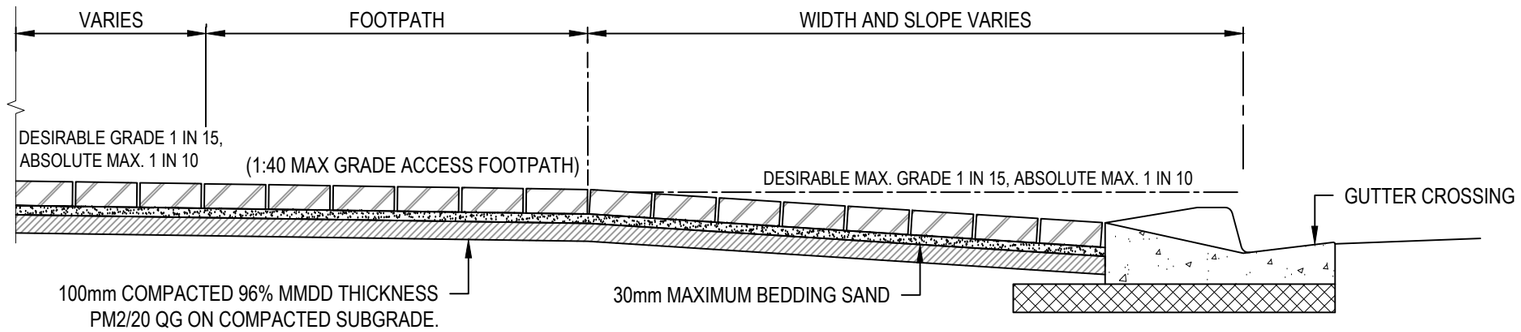


## SECTIONAL VIEW OF VEHICLE CROSSOVER

SCALE 1:10

(HIGH SIDE OF STREET)

ALL MEASUREMENTS IN MILLIMETRES

| REV | DESCRIPTION | DATE | DES | DRW | APP |
|---|---|---|---|---|---|
| D | MINOR AMENDMENTS | 06.11.2018 | AF | AF | MDH |
| C | ISSUED FOR REVIEW | 18.07.2017 | JZ | JC | DSL |
| B | ISSUED FOR REVIEW | 10.05.2016 | JZ | DL | DSL |
| A | ISSUED FOR REVIEW | 15.03.2016 | JZ | DL | DSL |

THIS PROJECT HAS BEEN ASSISTED BY THE LOCAL GOVERNMENT RESEARCH AND DEVELOPMENT SCHEME AND INSTITUTE OF PUBLIC WORKS ENGINEERING AUSTRALASIA

INFRASTRUCTURE GUIDELINES (SA)

SHEET TITLE

VEHICLE BLOCK PAVED CROSSING DETAIL

SCALE
AS SHOWN @ A3

DRAWING No. SD 235

REV D

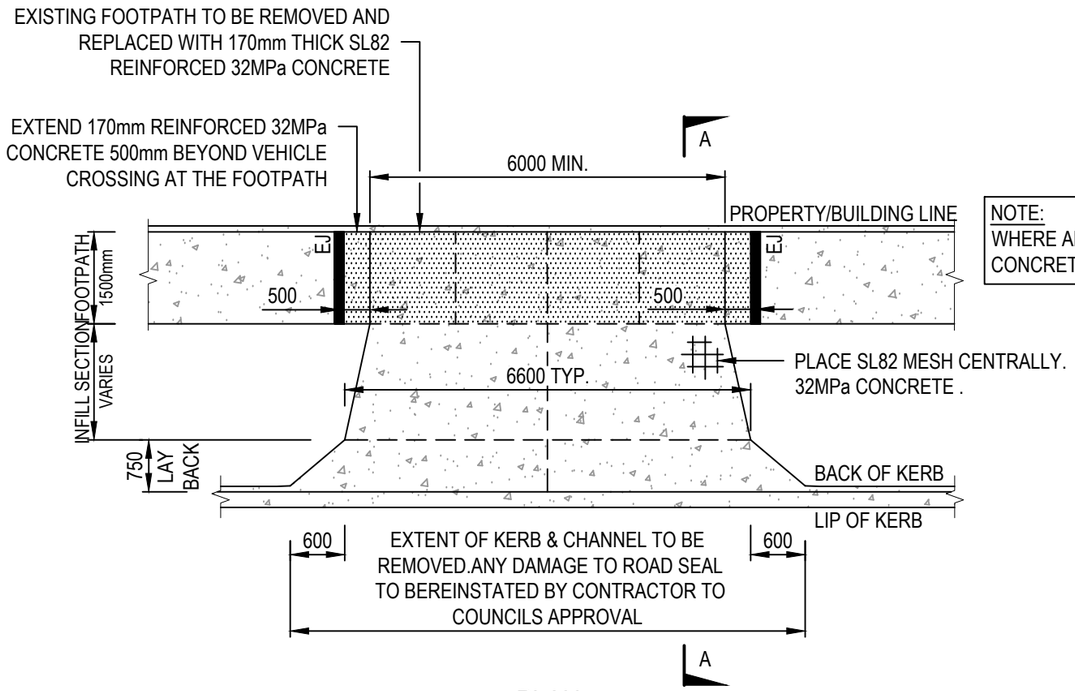


PLAN

NOTE:
WHERE ANY NEW CONCRETE ABUTS EXISTING CONCRETE INSTALL R12Ø DOWELS 450 LONG @ MAX. 600 CTS.

## LEGEND:

| | |
|---|---|
| EXPANSION JOINT | EJ |
| TOOLED JOINTS (REFER TO SD 210) | TJ |

## NOTES:

1. T.O.K. DENOTES TOP OF KERB.
2. INDUSTRIAL CROSSOVER WIDTH TO SUIT DESIGN VEHICLE. WIDTH TO BE APPROVED BY COUNCIL.

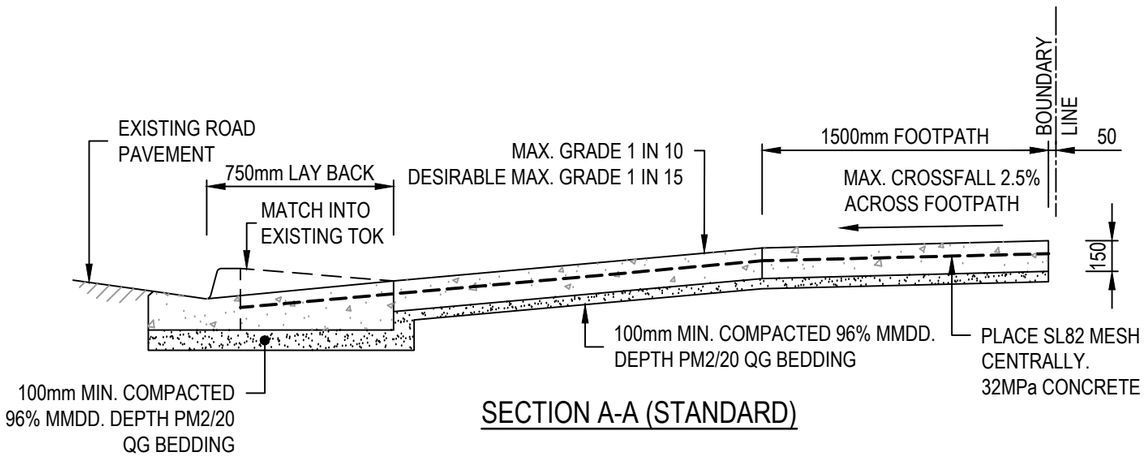


SECTION A-A (STANDARD)

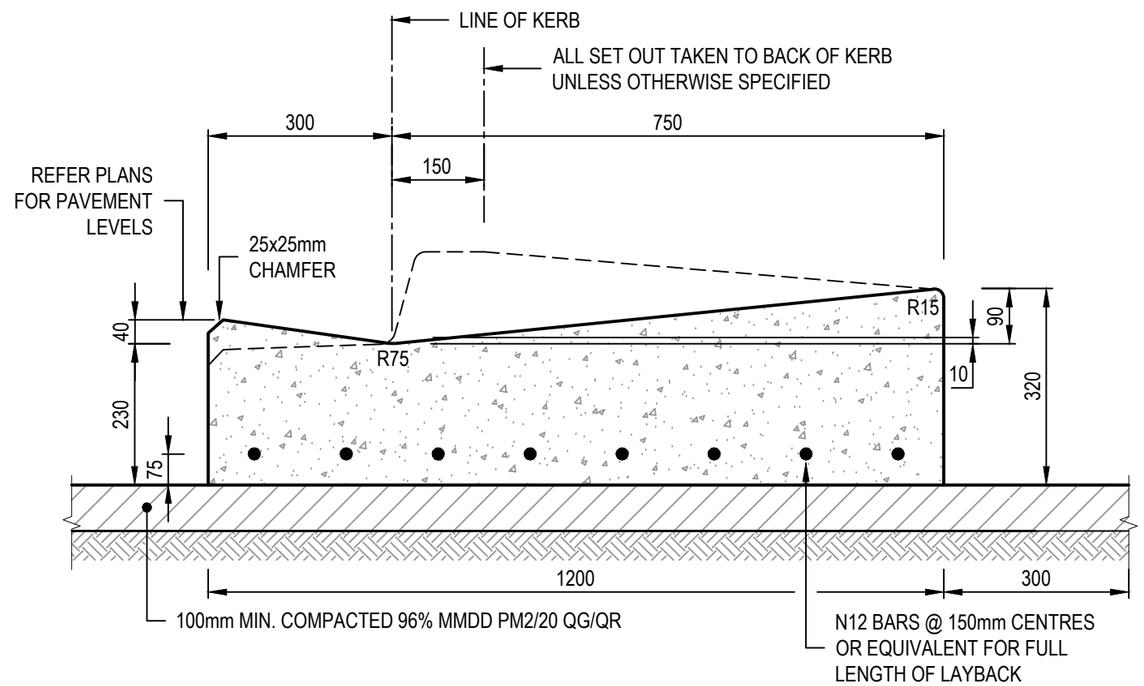


SECTIONAL VIEW OF INDUSTRIAL KERB LAYBACK

ALL MEASUREMENTS IN MILLIMETRES

| REV | DESCRIPTION | DATE | DES | DRW | APP |
|---|---|---|---|---|---|
| D | MINOR AMENDMENTS | 06.11.2018 | AF | AF | MDH |
| C | ISSUED FOR REVIEW | 10.06.2016 | JZ | DL | DSL |
| B | ISSUED FOR REVIEW | 10.05.2016 | JZ | DL | DSL |
| A | ISSUED FOR REVIEW | 15.03.2016 | JZ | DL | DSL |

THIS PROJECT HAS BEEN ASSISTED BY THE LOCAL GOVERNMENT RESEARCH AND DEVELOPMENT SCHEME AND INSTITUTE OF PUBLIC WORKS ENGINEERING AUSTRALASIA

INFRASTRUCTURE GUIDELINES (SA)

SHEET TITLE
INDUSTRIAL VEHICLE CROSSING DETAIL

SCALE
NTS @ A3

DRAWING No.
SD 240

REV
D

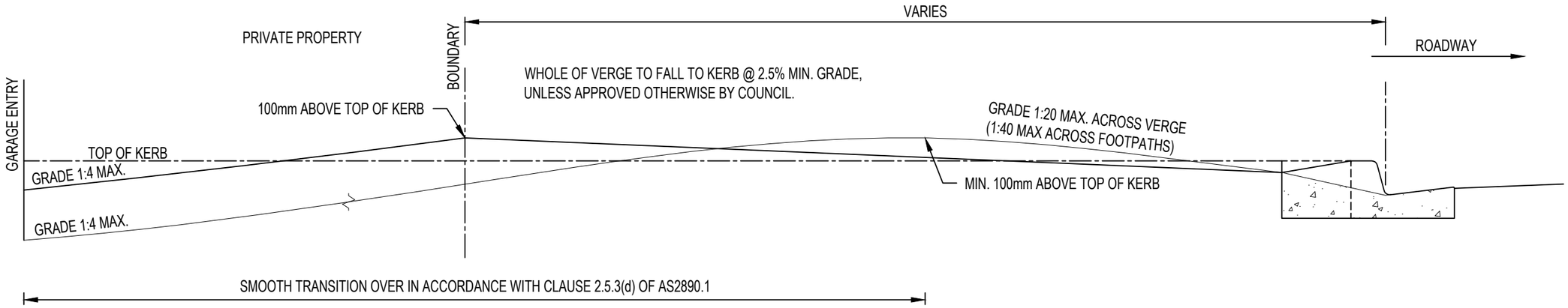


LONGITUDINAL DRIVEWAY SECTION - LOWER SIDE OF STREET

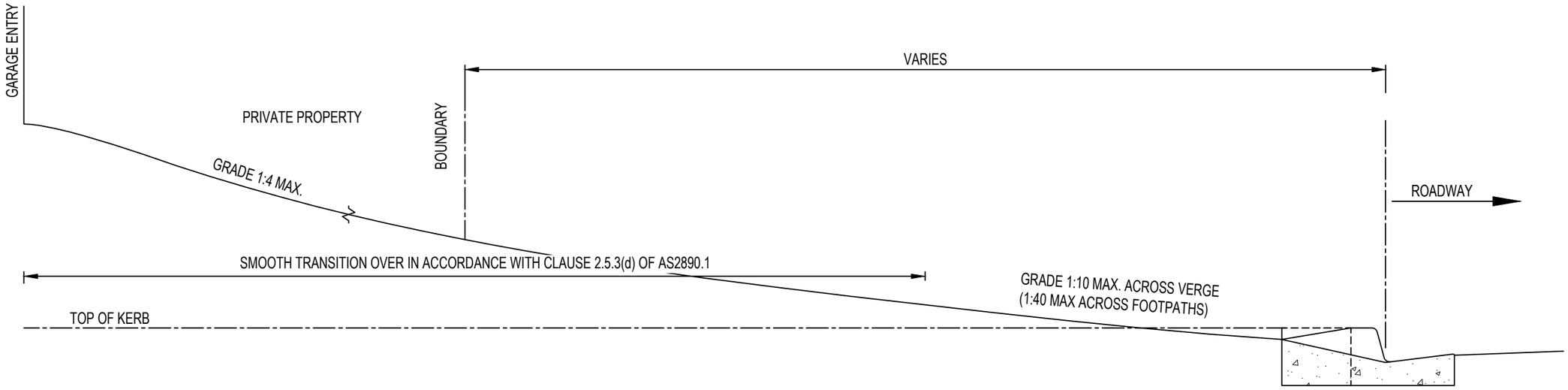


LONGITUDINAL DRIVEWAY SECTION - HIGHER SIDE OF STREET

## NOTES:

1. LOCATION AND DEPTH OF ANY UNDERGROUND SERVICES WITHIN FOOTWAY AREA MUST BE ESTABLISHED BEFORE COMMENCEMENT OF EXCAVATION.
2. UNDERTAKE A 'DIAL BEFORE YOU DIG' SEARCH (PH: 1100) TO LOCATE SERVICES PRIOR TO COMMENCING EXCAVATION.
3. TRANSITION AREA TO CONFORM TO AS2890.1 (2004) FIGURE 2.10. ANY CHANGES OF GRADE GREATER THAN 12.5% TO BE CHECKED USING THE TEMPLATE IN APPENDIX C AS2890.1

ALL MEASUREMENTS IN MILLIMETRES

| REV | DESCRIPTION | DATE | DES | DRW | APP |
|---|---|---|---|---|---|
| C | ISSUED FOR REVIEW | 18.07.2016 | JZ | DL | DSL |
| B | ISSUED FOR REVIEW | 10.05.2016 | JZ | DL | DSL |
| A | ISSUED FOR REVIEW | 15.03.2016 | JZ | DL | DSL |

THIS PROJECT HAS BEEN ASSISTED BY THE LOCAL GOVERNMENT RESEARCH AND DEVELOPMENT SCHEME AND INSTITUTE OF PUBLIC WORKS ENGINEERING AUSTRALASIA

INFRASTRUCTURE GUIDELINES (SA)

SHEET TITLE
VEHICLE CROSSING LONGITUDINAL SECTIONS

SCALE
1:20 @ A3

DRAWING No.
SD 245

REV
C

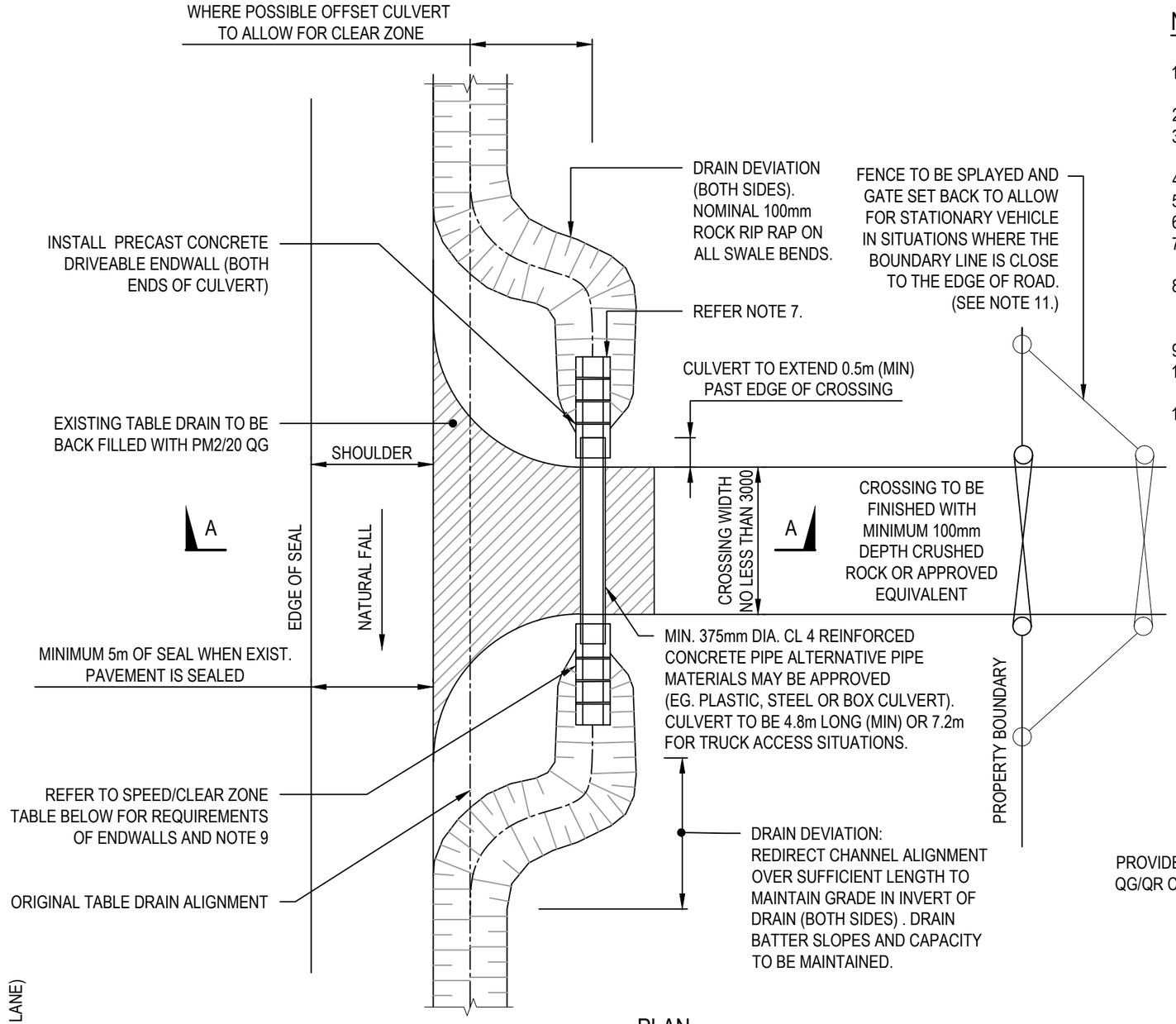


PLAN

## NOTES:

1. THIS ARRANGEMENT IS INTENDED FOR RURAL LOW DENSITY RESIDENTIAL& FARMING ACCESS WAYS.
2. COUNCIL RESERVES THE RIGHT TO DIRECT THE USE OF CULVERT END WALL TYPE.
3. THIS IS A TYPICAL CROSSING PLAN. SLIGHT VARIATIONS MAY OCCUR AFTER INSPECTION AND APPROVAL OF LOCATION BY COUNCIL.
4. PRIOR TO THE CONSTRUCTION, THE CROSSING LOCATION SHALL BE APPROVED BY COUNCIL.
5. ALL WORKS TO BE COMPLETED TO THE SATISFACTION OF COUNCIL.
6. MAINTENANCE OF THE CROSSOVER REMAINS THE RESPONSIBILITY OF THE LAND OWNER.
7. INSTALL LOW PROFILE HEAD WALLS OUTSIDE CLEAR ZONE & DRIVEABLE END WALLS WITHIN CLEAR ZONE. NO CULVERT TO BE WITHIN 3m OF EDGE OF SEAL.
8. THE CLEAR ZONE TABLE SHOWN IS A GUIDE ONLY AND FOR FURTHER ACCURATE CLEAR ZONE GUIDELINES REFER TO AUSTROADS 'GUIDE TO ROAD DESIGN - PART 6: ROADSIDE DESIGN, SAFETY AND BARRIERS' TABLE 4.1: 'CLEAR ZONES DISTANCES FROM EDGE OF THROUGH TRAVELLED WAY'
9. TABLE DRAINS ARE NOT TO BE CLOSER THAN 1.0m FROM FENCE LINES OR SERVICES.
10. COUNCIL MAY REQUIRE THAT CROSSING PAVEMENT BE SEALED DEPENDING ON SITE LOCATION AND SPECIFICS.
11. GATE OFFSET DIMENSIONS:

| STANDARD VEHICLE TYPE | MINIMUM GATE OFFSET FROM EDGE OF THROUGH LANE (m) |
|---|---|
| CAR (5.0m) | 8.2 |
| RIGID TRUCK (12.0m) | 12.5 |
| SEMI (19.0m) | 22 |
| B-DOUBLE (25.0m) | 28 |

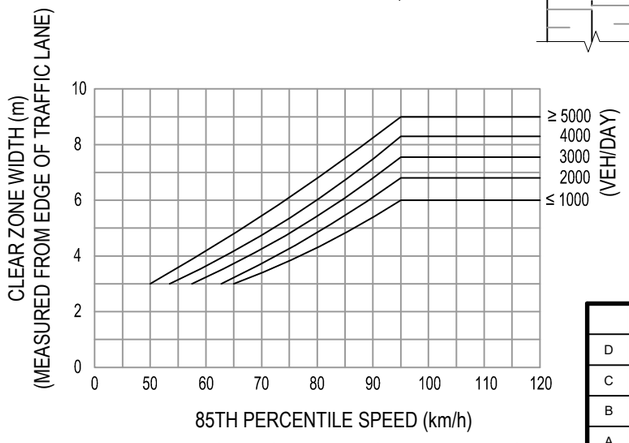


TYPICAL CLEAR ZONE WIDTHS

(REFER NOTE

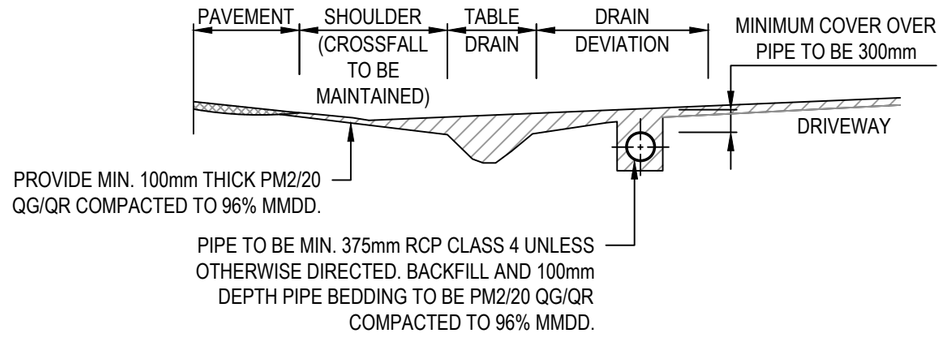


SECTION A-A

ALL MEASUREMENTS IN MILLIMETRES

| REV | DESCRIPTION | DATE | DES | DRW | APP |
|---|---|---|---|---|---|
| D | MINOR AMENDMENTS | 06.11.2018 | AF | AF | MDH |
| C | ISSUED FOR REVIEW | 18.07.2016 | JZ | DL | DSL |
| B | ISSUED FOR REVIEW | 10.05.2016 | JZ | DL | DSL |
| A | ISSUED FOR REVIEW | 15.03.2016 | JZ | DL | DSL |

THIS PROJECT HAS BEEN ASSISTED BY THE LOCAL GOVERNMENT RESEARCH AND DEVELOPMENT SCHEME AND INSTITUTE OF PUBLIC WORKS ENGINEERING AUSTRALASIA

INFRASTRUCTURE GUIDELINES (SA)

SHEET TITLE

TYPICAL SWALE DRAIN RESIDENTIAL VEHICLE CROSSING (RURAL ENTRANCE)

SCALE NTS @ A3

DRAWING No. SD 250

REV D

## NOTES:

1. THIS ARRANGEMENT IS INTENDED FOR RURAL LOW DENSITY RESIDENTIAL ACCESS WAYS.
2. COUNCIL RESERVES THE RIGHT TO DIRECT THE USE OF CULVERT END WALL TYPE.
3. THIS IS A TYPICAL CROSSING PLAN. SLIGHT VARIATIONS MAY OCCUR AFTER INSPECTION AND APPROVAL OF LOCATION BY COUNCIL.
4. PRIOR TO THE CONSTRUCTION, THE CROSSING LOCATION SHALL BE APPROVED BY COUNCIL.
5. ALL WORKS TO BE COMPLETED TO THE SATISFACTION OF COUNCIL.
6. MAINTENANCE OF THE CROSSOVER REMAINS THE RESPONSIBILITY OF THE LAND OWNER.
7. DRIVEABLE ENDWALLS TO BE USED WITHIN 1.5m OF THE EDGE OF SEAL
8. TABLE DRAINS ARE NOT TO BE CLOSER THAN 1.0m FROM FENCE LINES OR SERVICES.
9. CULVERT TO BE LOCATED AT LEAST 600mm FROM EDGE OF SEAL

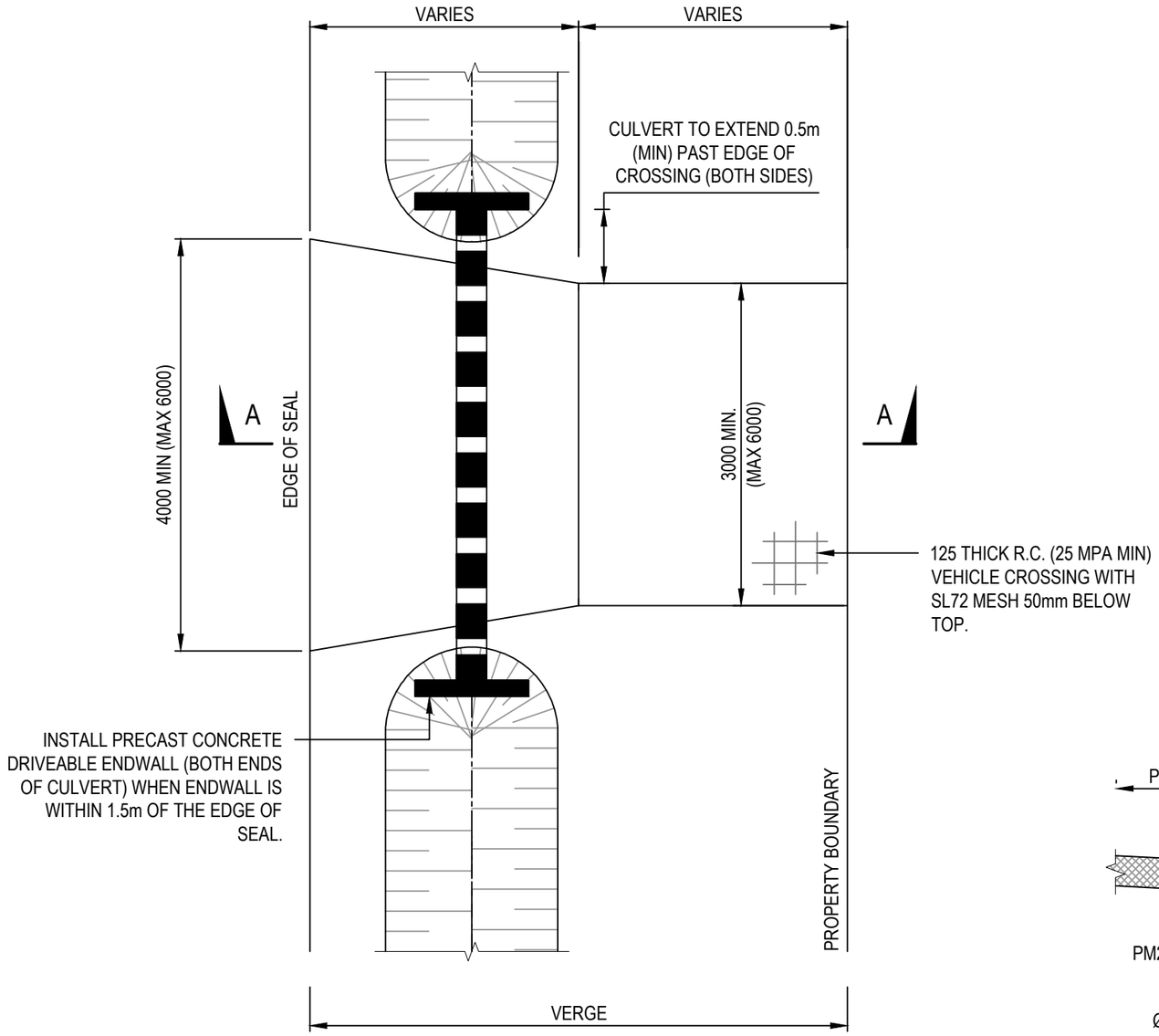


PLAN

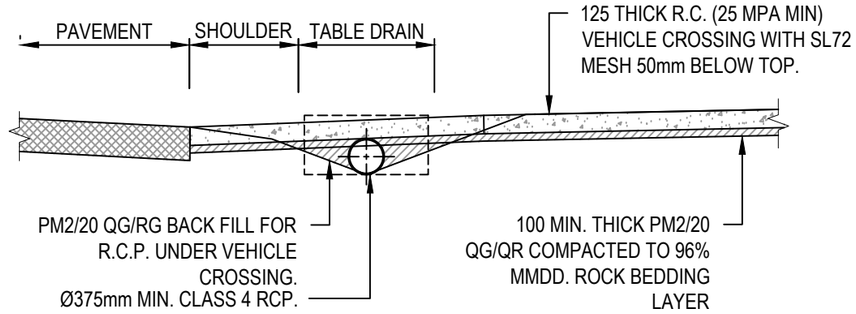


SECTION A-A

ALL MEASUREMENTS IN MILLIMETRES

| REV | DESCRIPTION | DATE | DES | DRW | APP |
|---|---|---|---|---|---|
| C | MINOR AMENDMENTS | 06.11.2018 | AF | AF | MDH |
| B | ISSUED FOR REVIEW | 10.05.2016 | JZ | DL | DSL |
| A | ISSUED FOR REVIEW | 15.03.2016 | JZ | DL | DSL |

THIS PROJECT HAS BEEN ASSISTED BY THE LOCAL GOVERNMENT RESEARCH AND DEVELOPMENT SCHEME AND INSTITUTE OF PUBLIC WORKS ENGINEERING AUSTRALASIA

INFRASTRUCTURE GUIDELINES (SA)

SHEET TITLE
TYPICAL SWALE DRAIN RESIDENTIAL VEHICLE CROSSING (URBAN ENTRANCE)

SCALE
NTS @ A3

DRAWING No.
SD 255

REV
C

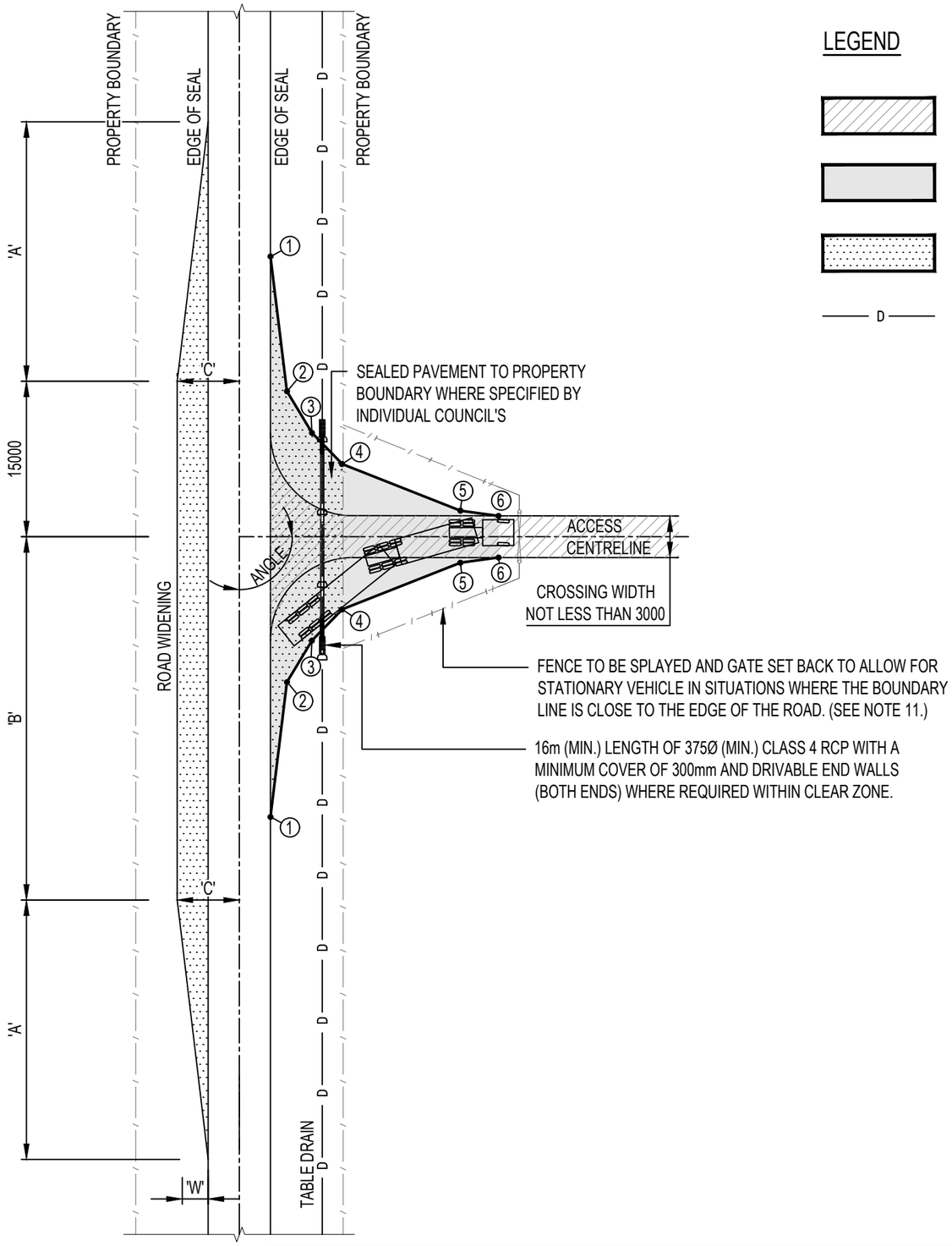


## LEGEND

- TYPICAL EXISTING ACCESS
- RECOMMENDED ACCESS SPLAY
- AREA TO BE SEALED
- D — EXISTING DRAIN

## SETOUT TABLE

| POINT No. | OFFSET DISTANCE FROM EDGE OF SEAL (m) | OFFSET DISTANCE FROM ACCESS CENTRELINE (m) |
|---|---|---|
| 1 | 0.0 | 27.0 |
| 2 | 1.6 | 14.0 |
| 3 | 4.0 | 10.0 |
| 4 | 6.9 | 7.0 |
| 5 | 18.3 | 2.5 |
| 6 | 22 | 2.0 |

## ROAD WIDENING

| | | | | |
|---|---|---|---|---|
| A = | $\frac{0.5 \times \text{SPEED (km/h)} \times \text{W (m)}}{3.6}$ | | | |
| B = | ANGLE: | 70° | 90° | 110° |
| | LENGTH: | 40 | 35 | 30 |
| C = | ON STRAIGHT: 6.0m (MIN) | | | |
| | ON CURVE: 2x (3.0m + CORRESPONDING WIDENING FOR CURVE RADIUS) | | | |
| W = | FORMATION WIDENING (IF REQUIRED BY COUNCIL) | | | |

## NOTES:

1. THIS ARRANGEMENT IS INTENDED FOR RURAL / FARMING ACCESS WAYS THAT REQUIRE SEMI / B DOUBLE ACCESS.
2. PAVED AREAS TO BE A MINIMUM OF 150mm DEPTH COMPACTED GRAVEL. PAVEMENT AREAS AND TYPE TO BE APPROVED BY COUNCIL.
3. COUNCIL RESERVES THE RIGHT TO DIRECT THE USE OF CULVERT END WALL TYPE.
4. THIS IS A TYPICAL CROSSING PLAN. SLIGHT VARIATIONS MAY OCCUR AFTER INSPECTION AND APPROVAL OF LOCATION BY COUNCIL.
5. PRIOR TO THE CONSTRUCTION, THE CROSSING LOCATION SHALL BE APPROVED BY COUNCIL.
6. ALL WORKS TO BE COMPLETED TO THE SATISFACTION OF COUNCIL.
7. MAINTENANCE OF THE CROSSOVER REMAINS THE RESPONSIBILITY OF THE LAND OWNER.
8. REFER SD 250 FOR CLEAR ZONE OFFSETS.
9. DRIVEABLE ENDWALLS TO BE USED IN CLEARZONE.
10. TABLE DRAINS ARE NOT TO BE CLOSER THAN 1.0m FROM FENCE LINES OR SERVICES.
11. COUNCIL MAY REQUIRE THAT CROSSING PAVEMENT BE SEALED DEPENDING ON SITE LOCATION AND SPECIFICS.
12. GATE OFFSET DIMENSIONS:

| STANDARD VEHICLE TYPE | MINIMUM GATE OFFSET FROM EDGE OF THROUGH LANE (m) |
|---|---|
| SEMI (19.0m) | 22 |
| B-DOUBLE (25.0m) | 28 |

ALL MEASUREMENTS IN MILLIMETRES

| REV | DESCRIPTION | DATE | DES | DRW | APP |
|---|---|---|---|---|---|
| B | ISSUED FOR REVIEW | 10.05.2016 | JZ | DL | DSL |
| A | ISSUED FOR REVIEW | 15.03.2016 | JZ | DL | DSL |

THIS PROJECT HAS BEEN ASSISTED BY THE LOCAL GOVERNMENT RESEARCH AND DEVELOPMENT SCHEME AND INSTITUTE OF PUBLIC WORKS ENGINEERING AUSTRALASIA

INFRASTRUCTURE GUIDELINES (SA)

SHEET TITLE

# TYPICAL SWALE DRAIN HEAVY VEHICLE CROSSING (RURAL ENTRANCE)

SCALE NTS @ A3

DRAWING No. SD 260

REV B

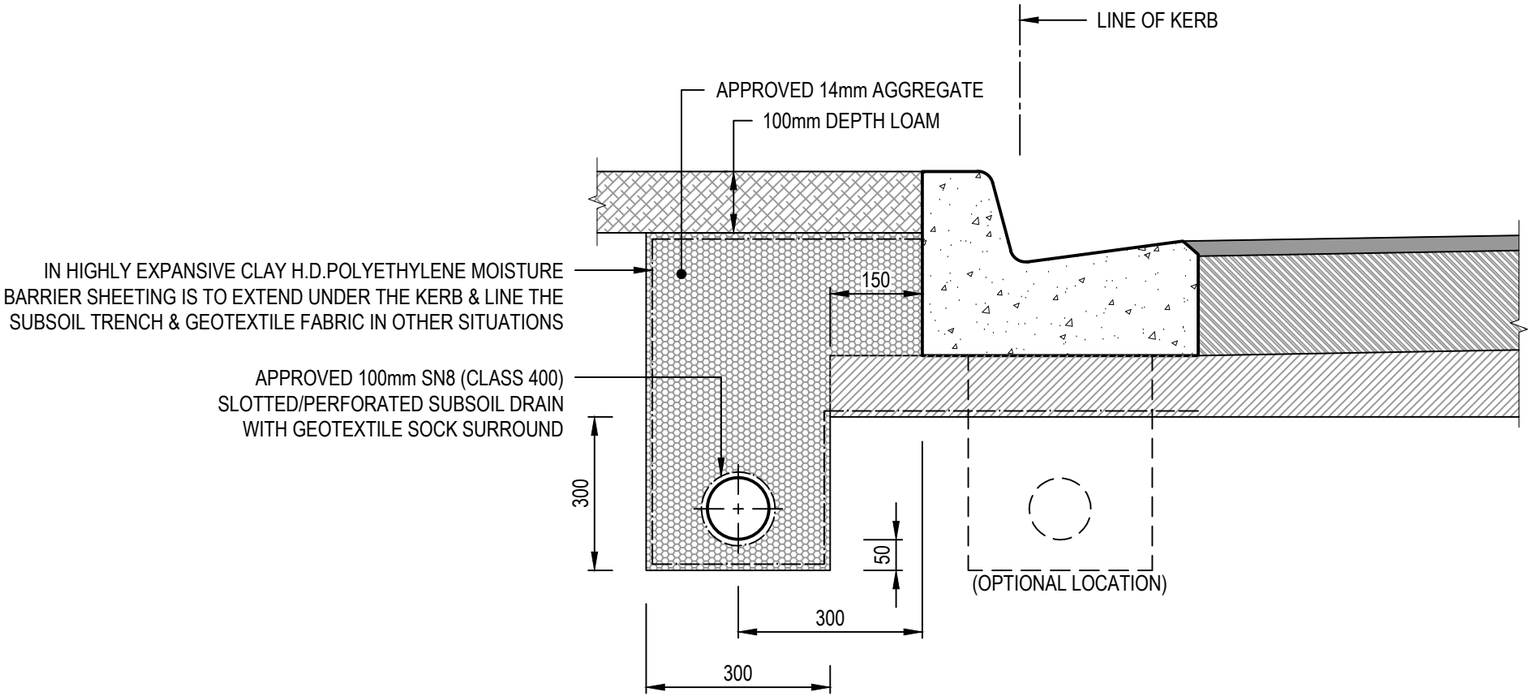


## TYPICAL SECTION

ALL MEASUREMENTS IN MILLIMETRES

## NOTES:

1. THE DRAINS SHALL BE LAID ON A GRADE PARALLEL TO THE FINISHED SURFACE.
2. FOR FLUSHOUT RISER DETAILS REFER TO STANDARD DRAWINGS SD 395.
3. WHERE THE SUBGRADE IS CLASSIFIED AS BEING EXPANSIVE, SUBSURFACE PAVEMENT DRAINS SHALL BE DESIGNED TO BE CONTAINED WHOLLY WITHIN THE CAPPING LAYER. IN ADDITION, NO PART OF THE SUBSURFACE DRAINAGE TRENCH SHALL BE LOCATED WITHIN 150mm OF THE UNDERLYING SUBGRADE. IF NECESSARY, THE CAPPING LAYER MAY HAVE TO BE THICKENED TO SATISFY THIS REQUIREMENT.

| REV | DESCRIPTION | DATE | DES | DRW | APP |
|---|---|---|---|---|---|
| C | MINOR AMENDMENTS | 06.11.2018 | AF | AF | MDH |
| B | ISSUED FOR REVIEW | 10.05.2016 | JZ | DL | DSL |
| A | ISSUED FOR REVIEW | 15.03.2016 | JZ | DL | DSL |

THIS PROJECT HAS BEEN ASSISTED BY THE LOCAL GOVERNMENT RESEARCH AND DEVELOPMENT SCHEME AND INSTITUTE OF PUBLIC WORKS ENGINEERING AUSTRALASIA

INFRASTRUCTURE GUIDELINES (SA)

SHEET TITLE
TYPICAL PAVEMENT SUBSOIL DRAINAGE

SCALE
1:10 @ A3

DRAWING No.
SD 265

REV
C

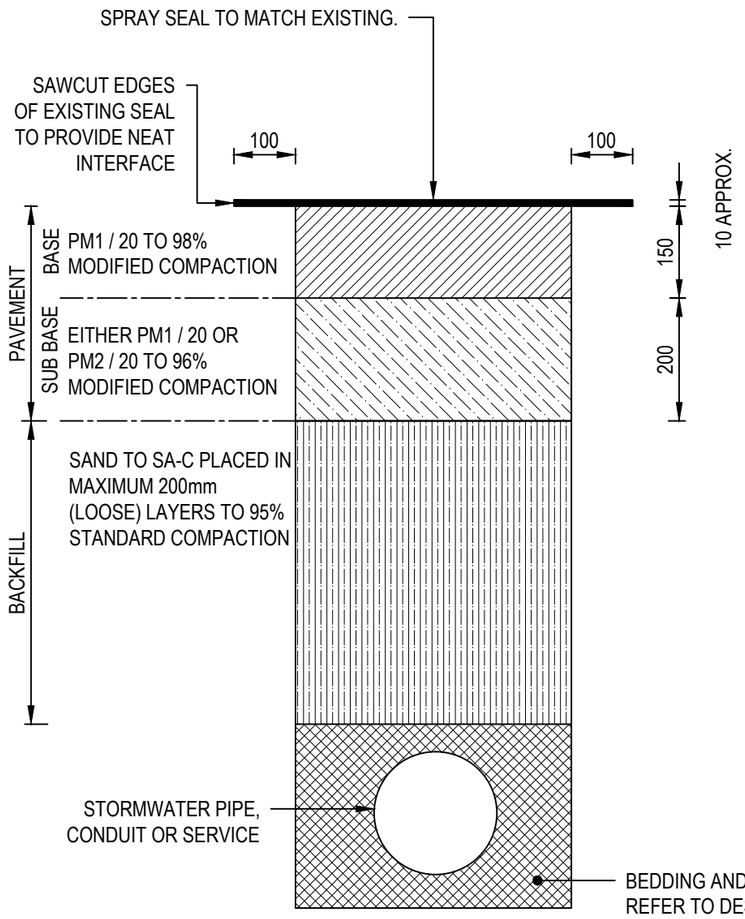


LIGHTLY TRAFFICKED ROADS WITH SPRAYED BITUMINOUS SURFACE

(< 1000 VPD)
(< 5% CV)

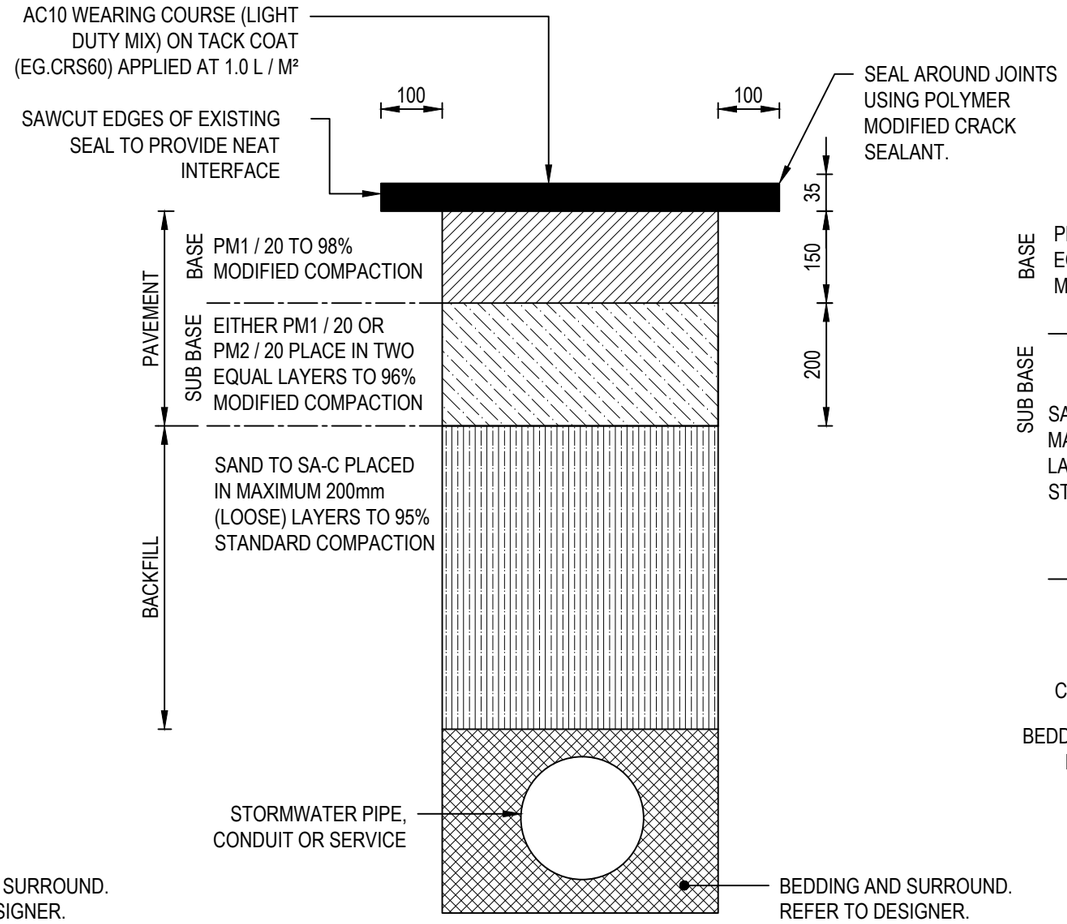


LIGHTLY TRAFFICKED ROADS WITH ASPHALT SURFACE

(< 1000 VPD)
(< 5% CV)

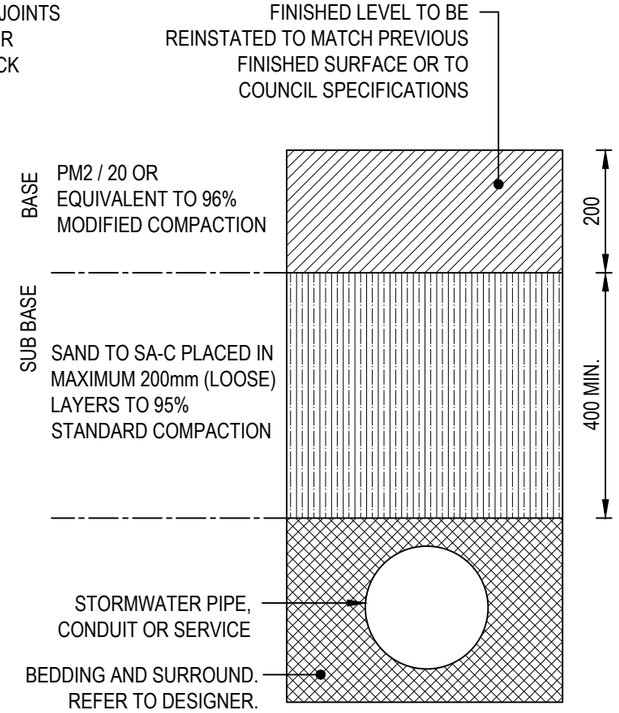


UNSEALED ROAD PAVEMENTS AND SHOULDERS

(< 1000 VPD)
(< 5% CV)

NOTE:

1. ROADS WITH TRAFFIC VOLUMES OR CV EXCEEDING ABOVE, REFER TO DPTI PAVEMENT REINSTATEMENT CONFIGURATIONS.

ALL MEASUREMENTS IN MILLIMETRES

| REV | DESCRIPTION | DATE | DES | DRW | APP |
|---|---|---|---|---|---|
| D | MINOR AMENDMENTS | 06.11.2018 | AF | AF | MDH |
| C | MINOR AMENDMENTS | 18.07.2017 | JZ | JC | DSL |
| B | ISSUED FOR REVIEW | 10.05.2016 | JZ | DL | DSL |
| A | ISSUED FOR REVIEW | 15.03.2016 | JZ | DL | DSL |

THIS PROJECT HAS BEEN ASSISTED BY THE LOCAL GOVERNMENT RESEARCH AND DEVELOPMENT SCHEME AND INSTITUTE OF PUBLIC WORKS ENGINEERING AUSTRALASIA

INFRASTRUCTURE GUIDELINES (SA)

SHEET TITLE
TYPICAL ROAD CROSSING TRENCH BACKFILL REQUIREMENTS

SCALE
NTS @ A3

DRAWING No.
SD 270

REV
D

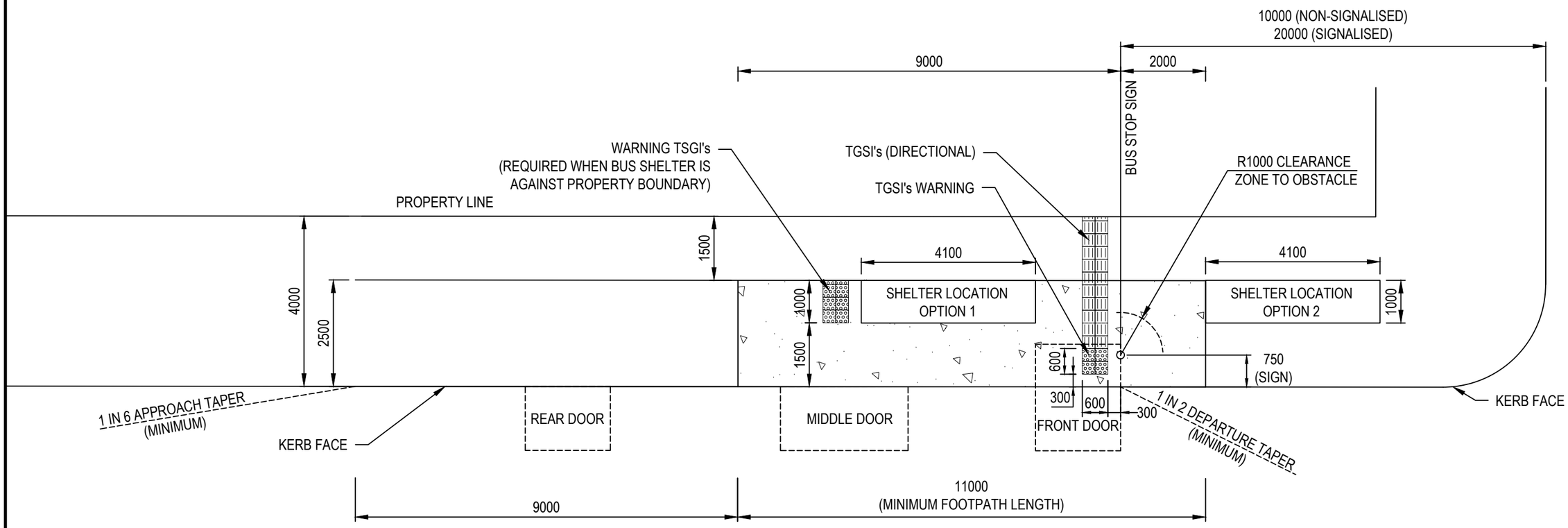


## NOTE:

1. MINIMUM FOOTPATH WIDTH SHOWN AS 4m (TOTAL) WITH SHELTER - MINIMUM FOOTPATH WIDTH WITHOUT SHELTER REDUCED TO 2.5m.

ALL MEASUREMENTS IN MILLIMETRES

| REV | DESCRIPTION | DATE | DES | DRW | APP |
|---|---|---|---|---|---|
| A | ISSUED FOR REVIEW | 18.07.2017 | JZ | JTC | DSL |

THIS PROJECT HAS BEEN ASSISTED BY THE LOCAL GOVERNMENT RESEARCH AND DEVELOPMENT SCHEME AND INSTITUTE OF PUBLIC WORKS ENGINEERING AUSTRALASIA

INFRASTRUCTURE GUIDELINES (SA)

SHEET TITLE
TYPICAL BUS STOP DETAIL

SCALE
NTS @ A3

DRAWING No.
SD 275

REV
A

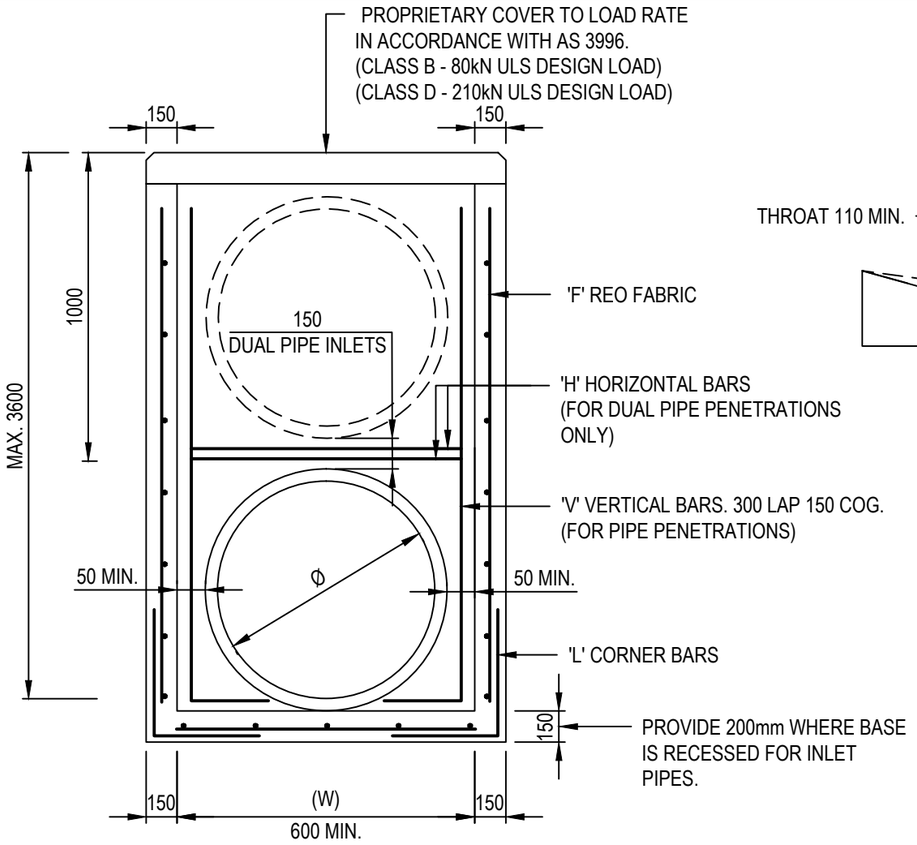


TYPICAL PIT DETAIL

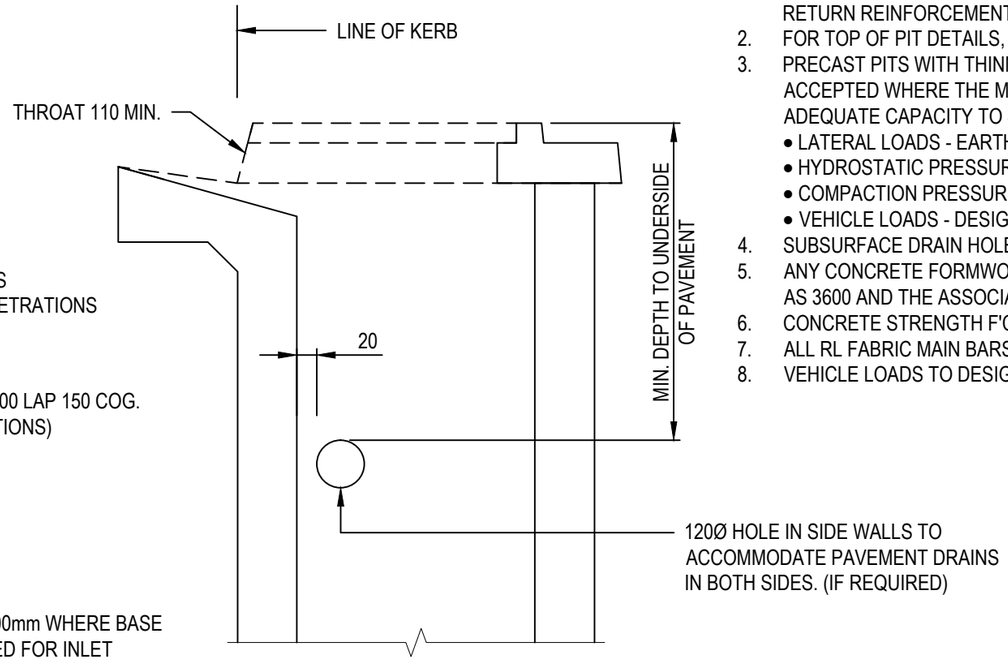


PRECAST PIT

## NOTES:

1. PIT REINFORCEMENT SHALL HAVE 300mm MIN. LAPS. CLEAR COVER TO BE 50mm MIN. CORNER RETURN REINFORCEMENT MAY BE FABRIC OR EQUIVALENT BARS.
2. FOR TOP OF PIT DETAILS, REFER TO RELEVANT STANDARD DRAWINGS.
3. PRECAST PITS WITH THINNER WALLS AND LESS STEEL OR FIBRE REINFORCED PITS MAY BE ACCEPTED WHERE THE MANUFACTURER CAN DEMONSTRATE THAT THE PITS HAVE ADEQUATE CAPACITY TO SUPPORT A COMBINATION OF THE FOLLOWING LOADS:
   - LATERAL LOADS - EARTH PRESSURE WITH APPROPRIATE SURCHARGE LIVE LOAD CLASS
   - HYDROSTATIC PRESSURE
   - COMPACTION PRESSURE (25kPa MIN.)
   - VEHICLE LOADS - DESIGN VEHICLE LOAD
4. SUBSURFACE DRAIN HOLES TO BE SEALED IF NOT USED.
5. ANY CONCRETE FORMWORK, REINFORCEMENT, POURING AND CURING SHALL COMPLY WITH AS 3600 AND THE ASSOCIATED CODES.
6. CONCRETE STRENGTH F'C - 32 MPa. (MIN.) AT 28 DAYS. SLUMP TO BE 80mm.
7. ALL RL FABRIC MAIN BARS SHOULD BE PLACED HORIZONTALLY.
8. VEHICLE LOADS TO DESIGN LOAD CLASS

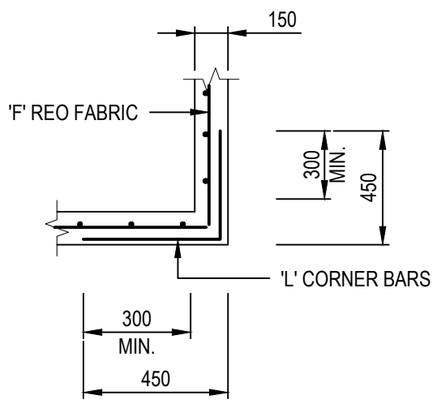


150mm CORNER DETAIL

## REINFORCEMENT DETAILS

| LOAD CLASS | MAX WIDTH (W) (mm) | 'F' FABRIC | 'H' HORIZONTAL BARS | 'V' VERTICAL BARS | 'L' CORNER BARS |
|---|---|---|---|---|---|
| B | 600 | SL82 (c) | 2/N10 | 1/N10 | N10 @ 300 (c) |
| B | 900 | SL82 (c) | 2/N10 | 1/N10 | N10 @ 300 (c) |
| B | 1200 | SL92 (c) | 2/N12 | 1/N12 | N10 @ 200 (c) |
| B | 1500 | SL92 (50 INTERNAL COVER) | 2/N12 | 1/N16 | N10 @ 200 (c) (50 INTERNAL COVER) |
| B | 1800 | SL92 (50 INTERNAL COVER) | 2/N16 | 1/N16 | N12 @ 200 (c) (50 INTERNAL COVER) |
| D | 600 | SL82 (c) | 2/N10 | 1/N10 | N10 @ 300 (c) |
| D | 900 | SL92 (50 INTERNAL COVER) | 2/N10 | 1/N10 | N10 @ 200 (c) (50 INTERNAL COVER) |
| D | 1200 | RL818 (50 INTERNAL COVER) | 2/N12 | 1/N12 | N12 @ 200 (c) (50 INTERNAL COVER) |
| D | 1500 | RL118 (50 INTERNAL COVER) | 2/N12 | 1/N16 | N12 @ 200 (c) (50 INTERNAL COVER) |
| D | 1800 | RL1218 (50 INTERNAL COVER) | 2/N16 | 1/N16 | N12 @ 200 (c) (50 INTERNAL COVER) |

## NOTE:

1. PROVIDE REINFORCEMENT AS PER TABLE FOR WALL WITH CORRESPONDING WIDTH (W).
2. IF ADJACENT WALLS HAVE DIFFERENT WIDTHS, ADOPT 'L' CORNER BARS CORRESPONDING TO HIGHER WIDTH.

ALL MEASUREMENTS IN MILLIMETRES

| REV | DESCRIPTION | DATE | DES | DRW | APP |
|---|---|---|---|---|---|
| D | MINOR AMENDMENTS | 06.11.2018 | AF | AF | MDH |
| C | MINOR AMENDMENTS | 18.07.2017 | JZ | JC | DSL |
| B | ISSUED FOR REVIEW | 10.05.2016 | JZ | DL | DSL |
| A | ISSUED FOR REVIEW | 15.03.2016 | RJF | DL | DSL |

THIS PROJECT HAS BEEN ASSISTED BY THE LOCAL GOVERNMENT RESEARCH AND DEVELOPMENT SCHEME AND INSTITUTE OF PUBLIC WORKS ENGINEERING AUSTRALASIA

INFRASTRUCTURE GUIDELINES (SA)

SHEET TITLE
STORMWATER PITS REINFORCEMENT DETAILS

SCALE
NTS @ A3

DRAWING No.
SD 300

REV
D

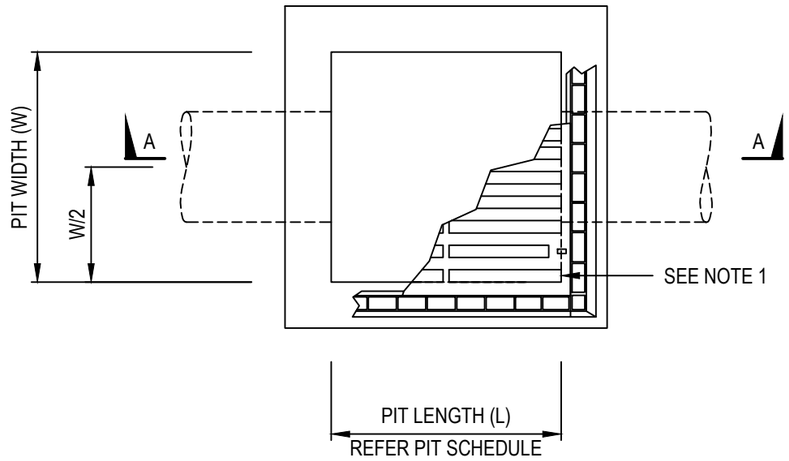


PLAN

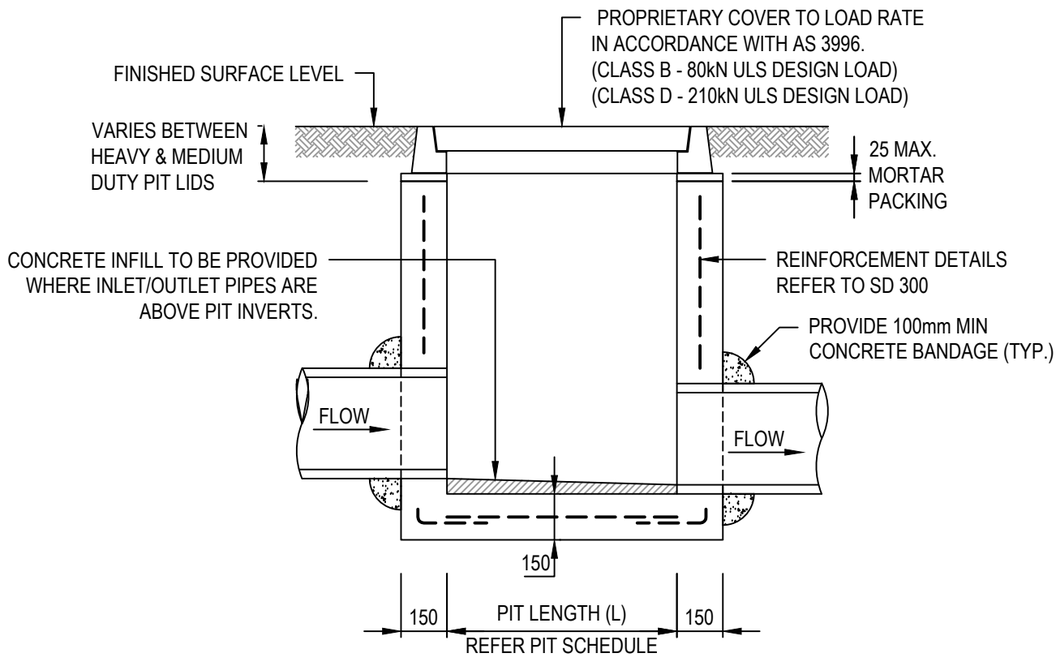


SECTION A-A

| MINIMUM INTERNAL PIT SIZES (AS 3500) | |
|---|---|
| PIT DEPTH | MINIMUM PIT SIZE |
| d ≤ 600 | 450 x 450 |
| 600 < d ≤ 900 | 600 x 600 |
| 900 < d ≤ 1200 | 600 x 900 |
| d ≥ 1200 | 900 x 900 |

NOTES:

1. HEAVY DUTY COVERS TO BE USED WHEN SUBJECT TO TRAFFICABLE LOADS (AS3996 CLASS D - 210kN) OR APPROVED EQUIVALENT. MEDIUM DUTY COVERS TO BE USED IN OFF ROAD USE (AS3996 CLASS B - 80kN) OR APPROVED EQUIVALENT.
2. CONCRETE PIT STREAMLINING TO BE PROVIDED WHERE SHOWN ON DRAWINGS.
3. INTERNAL PIT DIMENSIONS SHALL ALLOW FOR THE PIPE OUTER DIAMETER AT CUT ANGLE PLUS CONSTRUCTION TOLERANCE PLUS 50mm EACH SIDE.
4. MINIMUM PIT LID OPENING SIZE TO BE 600mm DIAMETER FOR ALL PITS GREATER THAN 600mm DEPTH
5. ALL GRATED COVERS TO BE HOT DIP GALVANISED FOR INSTALLATIONS IN NON-TRAFFICKED AREAS.
6. ROUND PIT LIDS PREFERRED TO REDUCE RISK OF FALL INTO THE PITS.

ALL MEASUREMENTS IN MILLIMETRES

| REV | DESCRIPTION | DATE | DES | DRW | APP |
|---|---|---|---|---|---|
| D | MINOR AMENDMENTS | 06.11.2018 | AF | AF | MDH |
| C | MINOR AMENDMENTS | 18.07.2017 | JZ | JC | DSL |
| B | ISSUED FOR REVIEW | 10.05.2016 | JZ | DL | DSL |
| A | ISSUED FOR REVIEW | 15.03.2016 | RJF | DL | DSL |

THIS PROJECT HAS BEEN ASSISTED BY THE LOCAL GOVERNMENT RESEARCH AND DEVELOPMENT SCHEME AND INSTITUTE OF PUBLIC WORKS ENGINEERING AUSTRALASIA

INFRASTRUCTURE GUIDELINES (SA)

SHEET TITLE
STORMWATER JUNCTION PIT
/ GRATED INLET PIT

SCALE
NTS @ A3

DRAWING No.
SD 305

REV
D

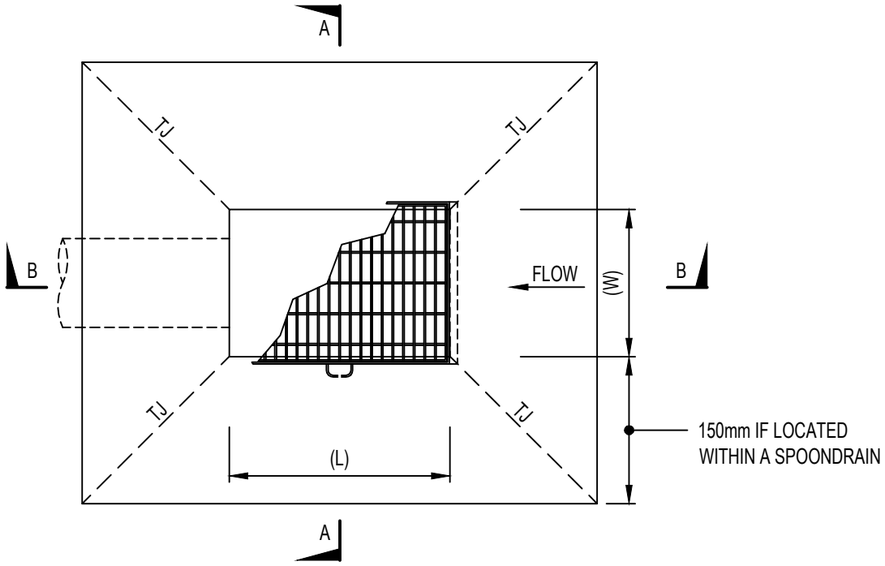


PLAN

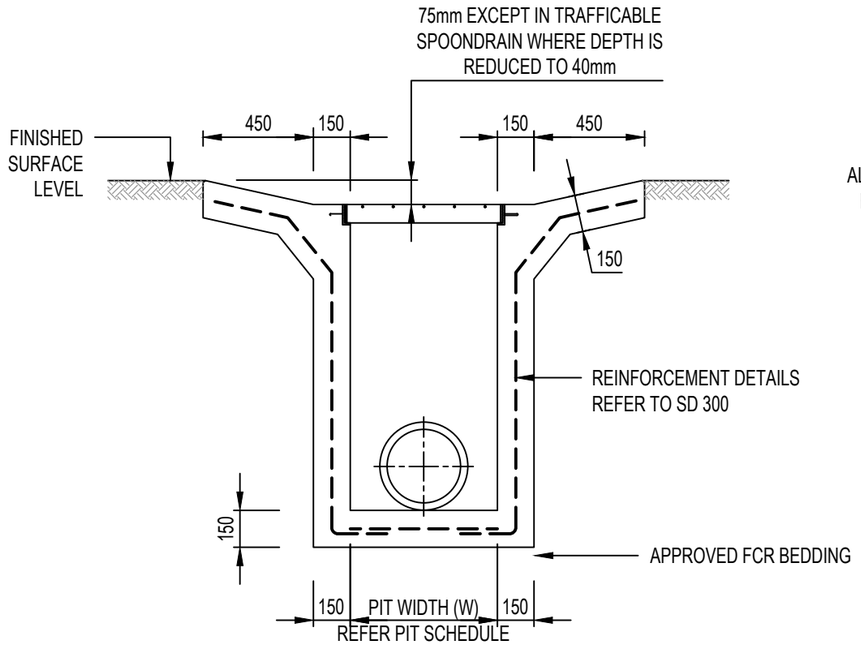


SECTION A-A

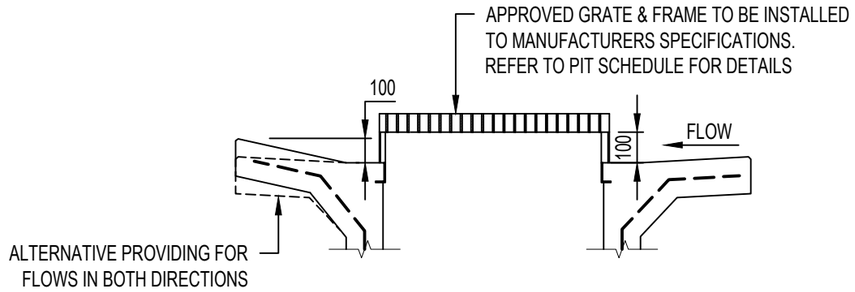


ALTERNATIVE ARRANGEMENT

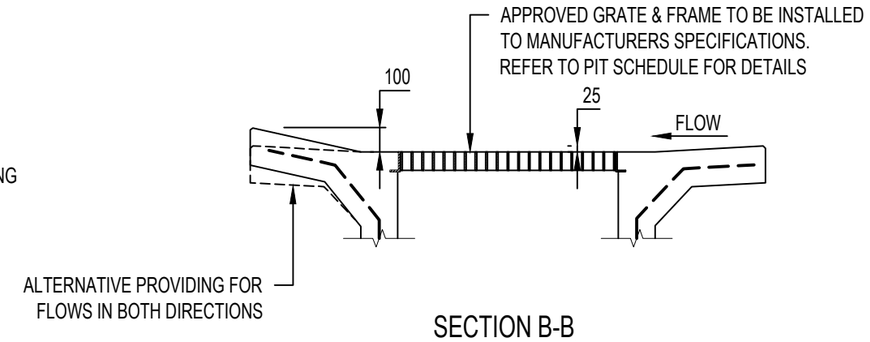


SECTION B-B

## LEGEND:

TOOLED JOINT (REFER TO SD210) — — TJ — —

## NOTES:

1. HEAVY DUTY COVERS TO BE USED WHEN SUBJECT TO TRAFFICABLE LOADS (AS3996 CLASS D - 210kN) OR APPROVED EQUIVALENT. MEDIUM DUTY COVERS TO BE USED IN OFF ROAD USE (AS3996 CLASS B - 80kN) OR APPROVED EQUIVALENT.
2. IF PIT IS LOCATED WITHIN A SPOON DRAIN REDUCE DEPRESSION TO 40mm
3. USE HEELSAFE GRATES IN PEDESTRIAN AREAS U.N.O.
4. GRATES TO BE BOLT DOWN U.N.O.

ALL MEASUREMENTS IN MILLIMETRES

| REV | DESCRIPTION | DATE | DES | DRW | APP |
|---|---|---|---|---|---|
| C | MINOR AMENDMENTS | 18.07.2017 | JZ | JC | DSL |
| B | ISSUED FOR REVIEW | 10.05.2016 | JZ | DL | DSL |
| A | ISSUED FOR REVIEW | 15.03.2016 | RJF | DL | DSL |

THIS PROJECT HAS BEEN ASSISTED BY THE LOCAL GOVERNMENT RESEARCH AND DEVELOPMENT SCHEME AND INSTITUTE OF PUBLIC WORKS ENGINEERING AUSTRALASIA

INFRASTRUCTURE GUIDELINES (SA)

SHEET TITLE
STORMWATER DEPRESSED GRATED PIT

SCALE
NTS @ A3

DRAWING No.
SD 310

REV
C

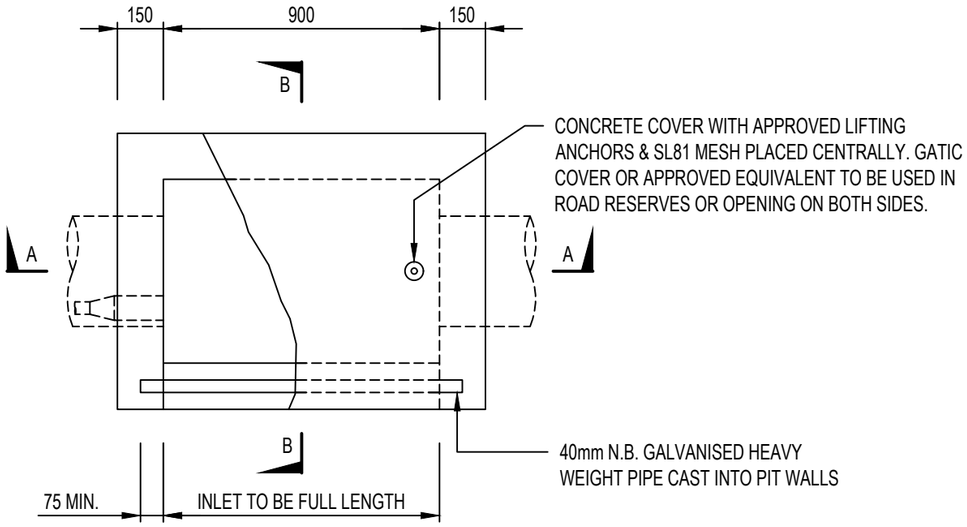


PLAN

## NOTES:

1. PLACEMENT OF PIT WITHIN ROAD RESERVE SUBJECT TO COUNCIL APPROVAL.
2. REFER TO PIT SCHEDULE FOR CORRECT PIT ORIENTATION.

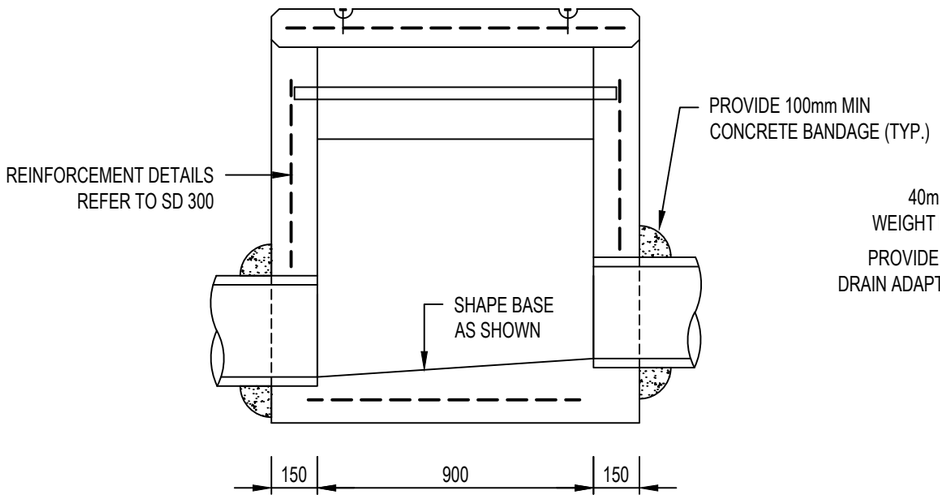


SECTION A-A

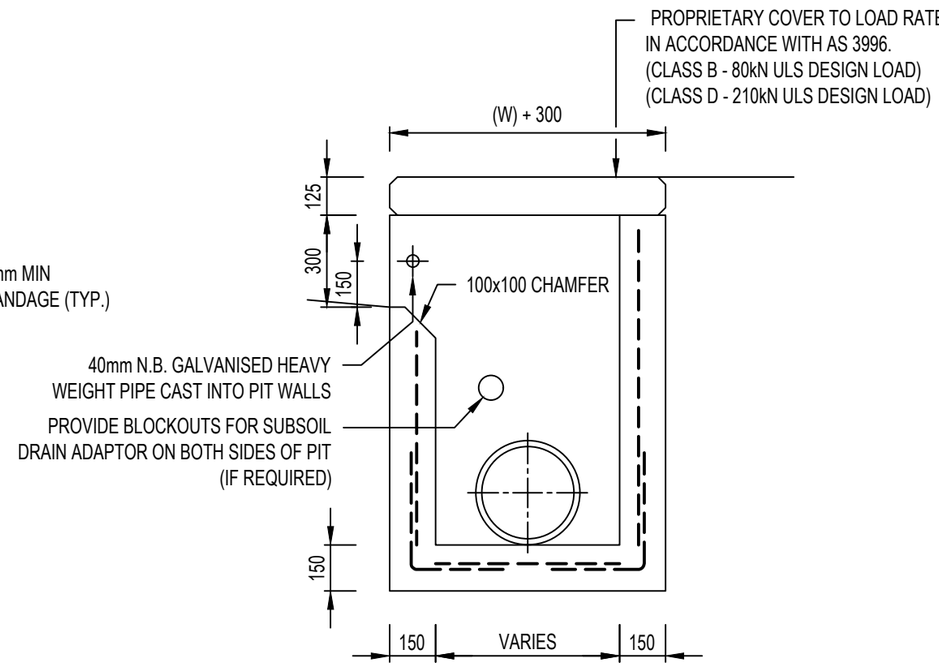


SECTION B-B

ALL MEASUREMENTS IN MILLIMETRES

| REV | DESCRIPTION | DATE | DES | DRW | APP |
|---|---|---|---|---|---|
| C | MINOR AMENDMENTS | 18.07.2017 | JZ | JC | DSL |
| B | ISSUED FOR REVIEW | 10.05.2016 | JZ | DL | DSL |
| A | ISSUED FOR REVIEW | 15.03.2016 | RJF | DL | DSL |

THIS PROJECT HAS BEEN ASSISTED BY THE LOCAL GOVERNMENT RESEARCH AND DEVELOPMENT SCHEME AND INSTITUTE OF PUBLIC WORKS ENGINEERING AUSTRALASIA

INFRASTRUCTURE GUIDELINES (SA)

SHEET TITLE
STORMWATER INLET CATCH PIT / FIELD GULLY

SCALE
NTS @ A3

DRAWING No.
SD 315

REV
C

## NOTE:

1. REFER TO SD 100 FOR KERB DETAILS.
2. CHANNEL DEPTH TRANSITION TO BE INCREASED TO 1200mm BOTH SIDES AT LOW POINT (SAG) LOCATIONS

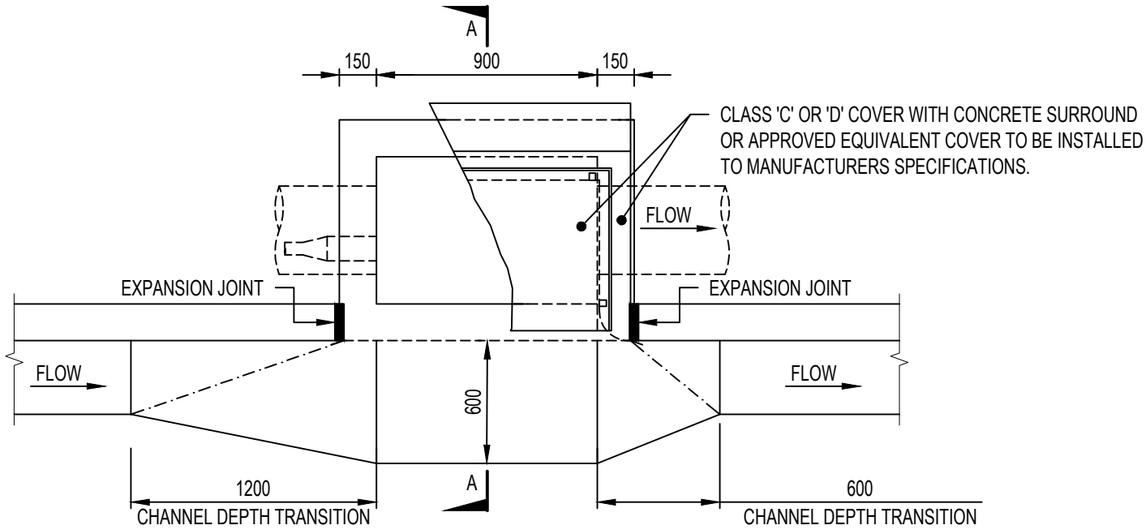


PLAN

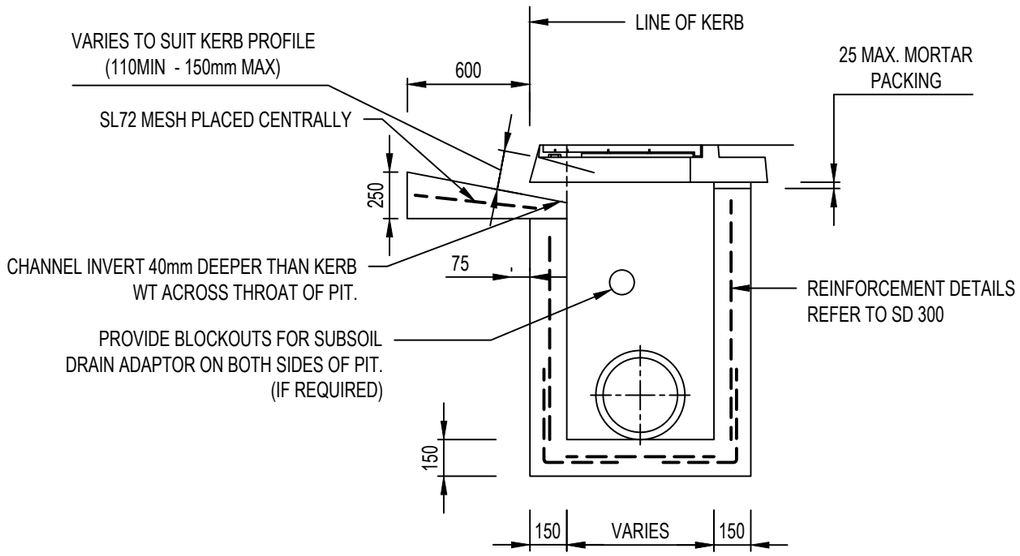


SECTION A-A

ALL MEASUREMENTS IN MILLIMETRES

| REV | DESCRIPTION | DATE | DES | DRW | APP |
|---|---|---|---|---|---|
| C | MINOR AMENDMENTS | 18.07.2017 | JZ | JC | DSL |
| B | ISSUED FOR REVIEW | 10.05.2016 | JZ | DL | DSL |
| A | ISSUED FOR REVIEW | 15.03.2016 | RJF | DL | DSL |

THIS PROJECT HAS BEEN ASSISTED BY THE LOCAL GOVERNMENT RESEARCH AND DEVELOPMENT SCHEME AND INSTITUTE OF PUBLIC WORKS ENGINEERING AUSTRALASIA

INFRASTRUCTURE GUIDELINES (SA)

SHEET TITLE
STORMWATER SIDE ENTRY PIT 900mm INLET

SCALE
NTS @ A3

DRAWING No.
SD 320

REV
C

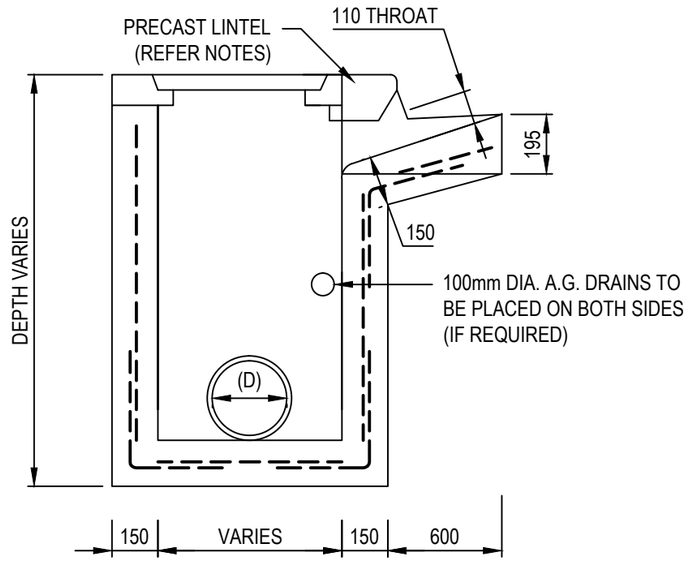


SECTION A-A

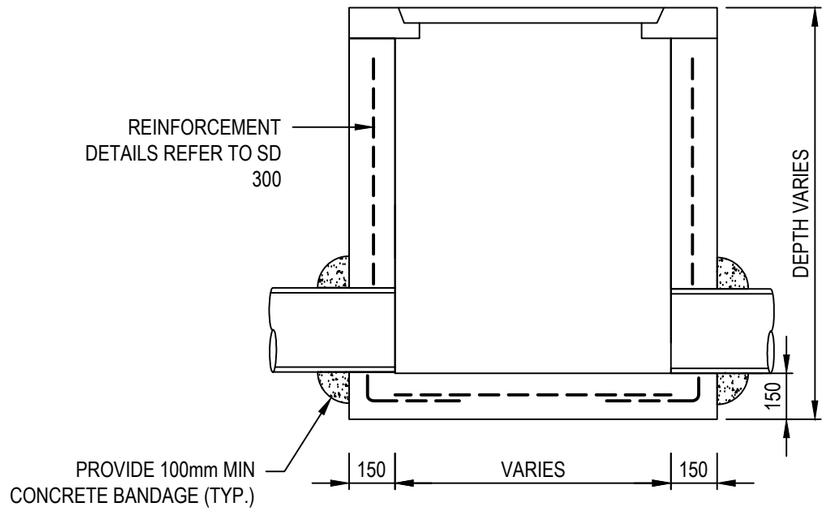


SECTION B-B

## NOTES:

1. PRECAST LINTEL FRAME AND LIDS AS APPROVED BY COUNCIL TO BE INSTALLED TO MANUFACTURERS RECOMMENDATIONS.
2. CONSTRUCT - 100mm DIA. P.V.C. PIPE WITH CONSTRUCTION WORKS TO DRAIN WATER FROM PAVEMENT. AS DIRECTED BY COUNCIL.
3. AT LOW POINT TRANSITION 1200mm BOTH SIDES.
4. PRECAST LINTEL TO MATCH REQUIRED KERB TYPE.

ALL MEASUREMENTS IN MILLIMETRES

| REV | DESCRIPTION | DATE | DES | DRW | APP |
|---|---|---|---|---|---|
| D | MINOR AMENDMENTS | 06.11.2018 | AF | AF | MDH |
| C | MINOR AMENDMENTS | 18.07.2017 | JZ | JC | DSL |
| B | ISSUED FOR REVIEW | 10.05.2016 | JZ | DL | DSL |
| A | ISSUED FOR REVIEW | 15.03.2016 | RJF | DL | DSL |

THIS PROJECT HAS BEEN ASSISTED BY THE LOCAL GOVERNMENT RESEARCH AND DEVELOPMENT SCHEME AND INSTITUTE OF PUBLIC WORKS ENGINEERING AUSTRALASIA

INFRASTRUCTURE GUIDELINES (SA)

SHEET TITLE
STORMWATER SIDE ENTRY PIT AND LIDS WITH PRECAST LINTEL

SCALE
NTS @ A3

DRAWING No.
SD 325

REV
D

## NOTE:

1. REFER TO SD 100 FOR KERB DETAILS.
2. CHANNEL DEPTH TRANSITION TO BE INCREASED TO 1200mm BOTH SIDES AT LOW POINT (SAG) LOCATIONS

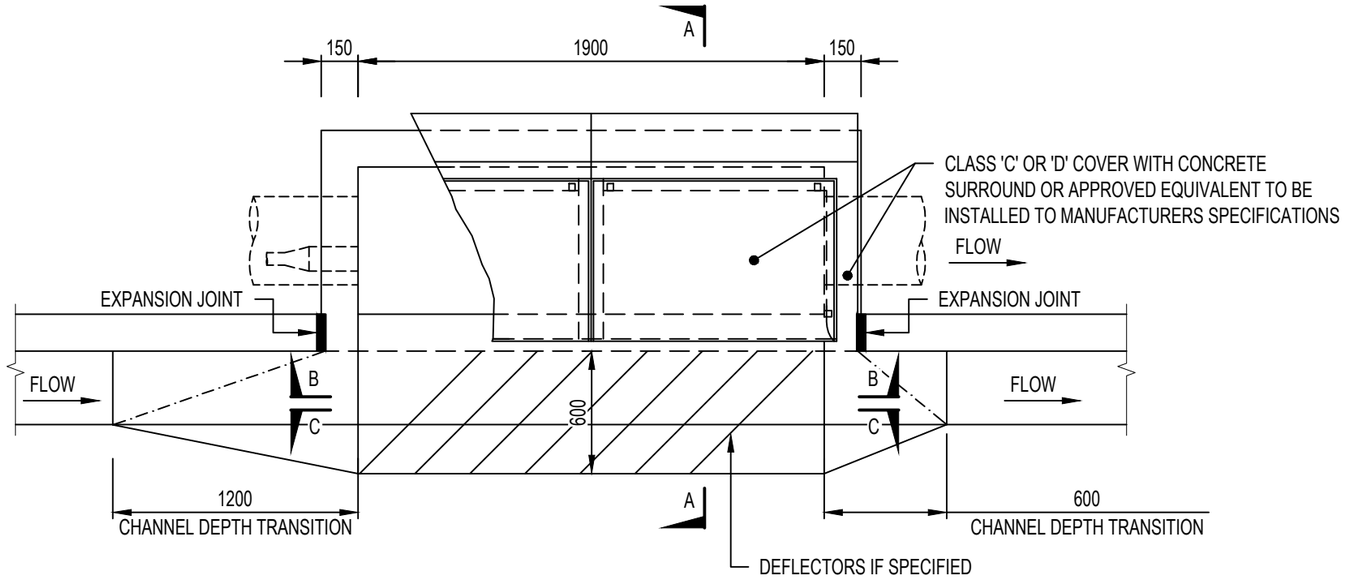


PLAN

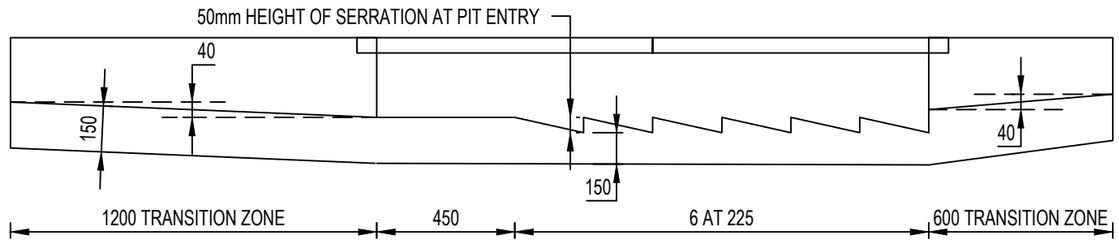


SECTION B-B

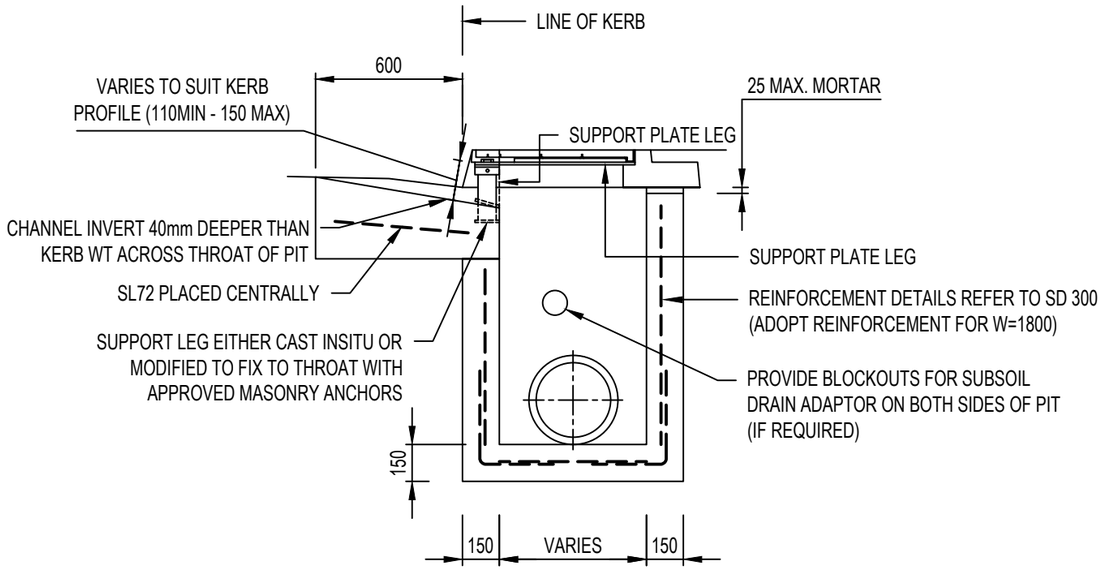


SECTION A-A

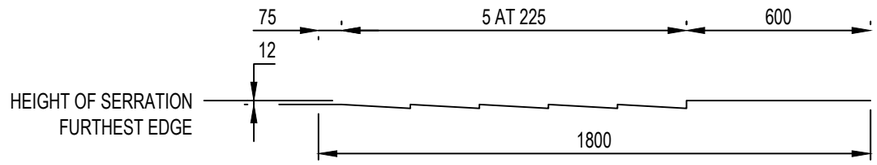


SECTION C-C

ALL MEASUREMENTS IN MILLIMETRES

| REV | DESCRIPTION | DATE | DES | DRW | APP |
|---|---|---|---|---|---|
| C | MINOR AMENDMENTS | 18.07.2017 | JZ | JC | DSL |
| B | ISSUED FOR REVIEW | 10.05.2016 | JZ | DL | DSL |
| A | ISSUED FOR REVIEW | 15.03.2016 | RJF | DL | DSL |

THIS PROJECT HAS BEEN ASSISTED BY THE LOCAL GOVERNMENT RESEARCH AND DEVELOPMENT SCHEME AND INSTITUTE OF PUBLIC WORKS ENGINEERING AUSTRALASIA

INFRASTRUCTURE GUIDELINES (SA)

SHEET TITLE
STORMWATER DOUBLE SIDE ENTRY PIT 1900mm INLET

SCALE
NTS @ A3

DRAWING No.
SD 330

REV
C

## NOTES:

1. REFER TO SD100 FOR KERB DETAILS.
2. CLASS D LOAD RATING REQUIRED.
3. CHANNEL DEPTH TRANSITION TO BE INCREASED TO 1200mm ON BOTH SIDES AT LOW POINT (SAG) LOCATIONS

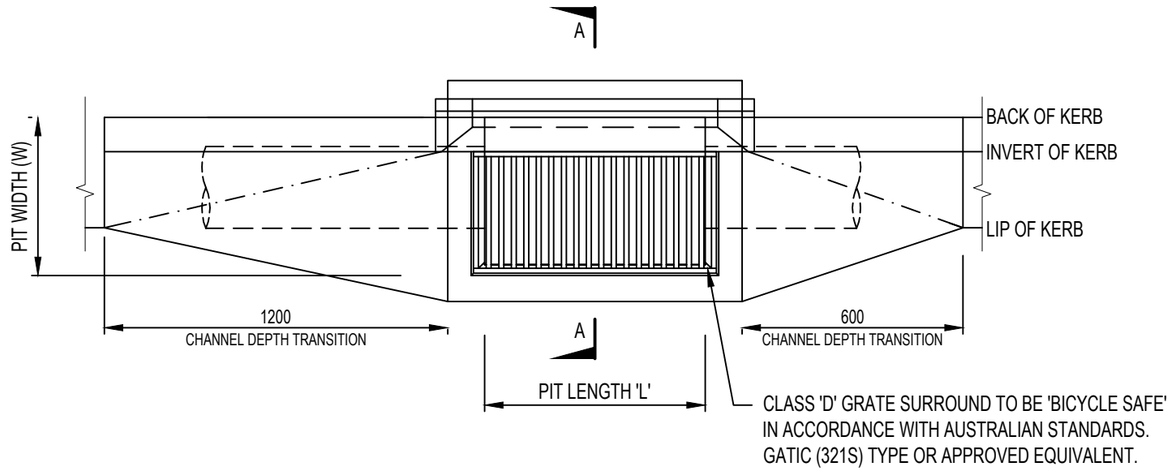


PLAN

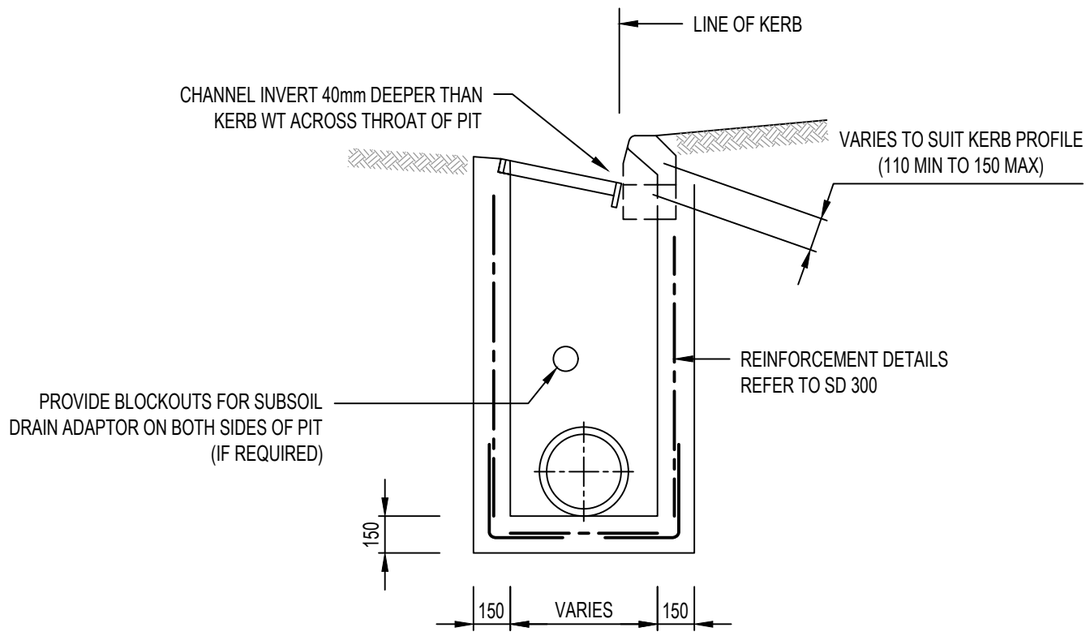


SECTION A-A

ALL MEASUREMENTS IN MILLIMETRES

| REV | DESCRIPTION | DATE | DES | DRW | APP |
|---|---|---|---|---|---|
| C | MINOR AMENDMENTS | 18.07.2017 | JZ | JC | DSL |
| B | ISSUED FOR REVIEW | 10.05.2016 | JZ | DL | DSL |
| A | ISSUED FOR REVIEW | 15.03.2016 | RJF | DL | DSL |

THIS PROJECT HAS BEEN ASSISTED BY THE LOCAL GOVERNMENT RESEARCH AND DEVELOPMENT SCHEME AND INSTITUTE OF PUBLIC WORKS ENGINEERING AUSTRALASIA

INFRASTRUCTURE GUIDELINES (SA)

SHEET TITLE
PRECAST SIDE ENTRY PIT INLET WITH GRATE INLINE

SCALE
NTS @ A3

DRAWING No.
SD 335

REV
C

## NOTE:

1. CLASS D LOAD RATING REQUIRED FOR GRATE. COVERS TO BE CLASS B OR HIGHER IF LIKELY TO BE DRIVEN OVER
2. PRECAST LINTEL AND GRATES APPROVED BY COUNCIL TO BE INSTALLED BY MANUFACTURERS RECOMMENDATIONS.
3. CHANNEL DEPTH TRANSITION TO BE INCREASED TO 1200mm ON BOTH SIDES AT LOW POINT (SAG) LOCATIONS

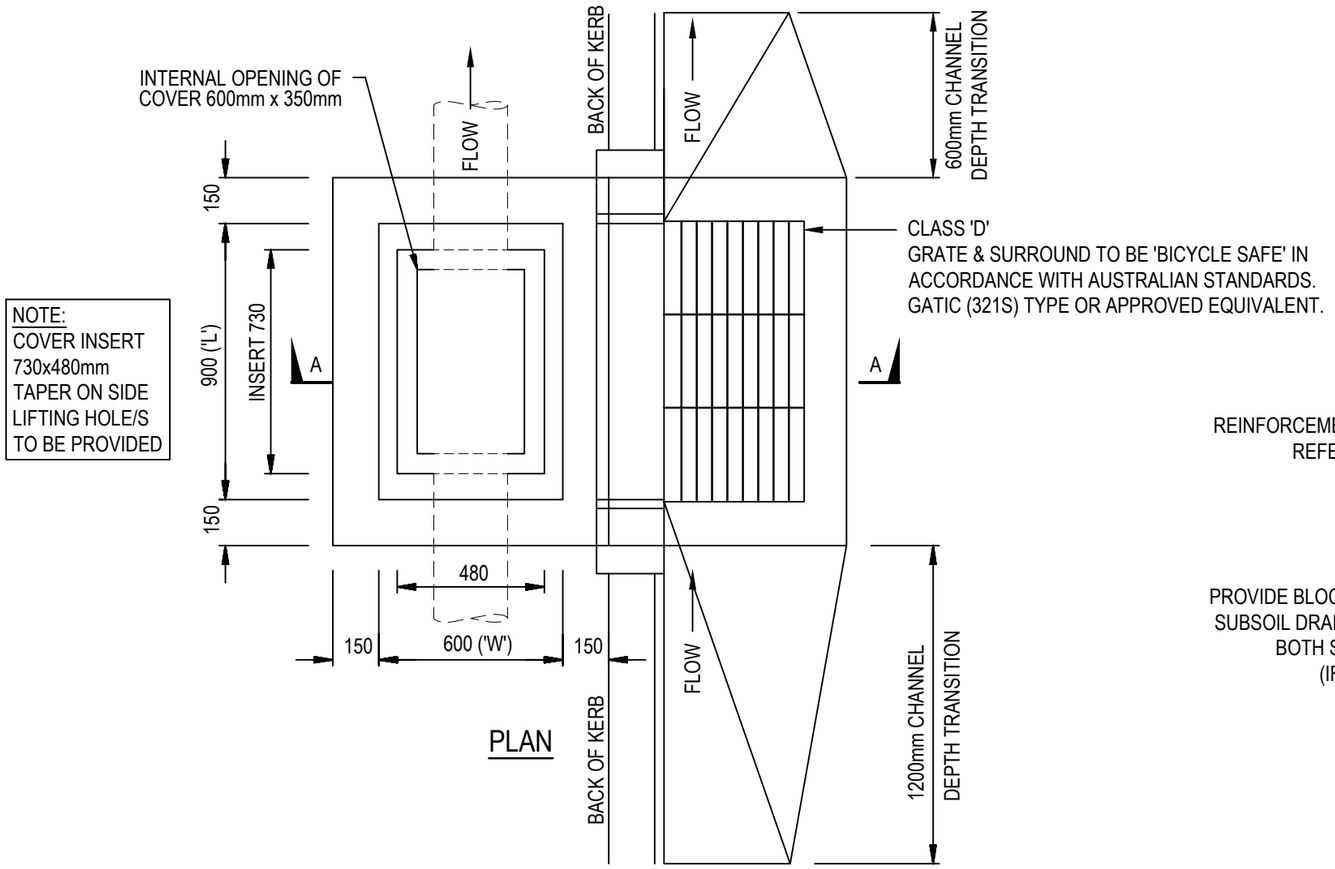


PLAN

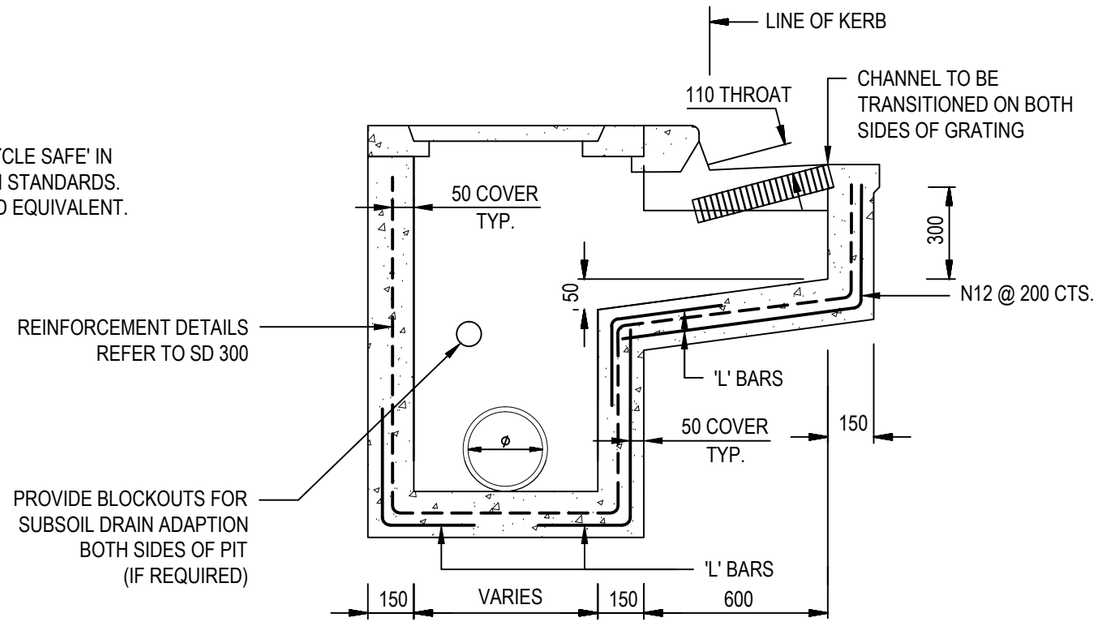


SECTION A-A

ALL MEASUREMENTS IN MILLIMETRES

| REV | DESCRIPTION | DATE | DES | DRW | APP |
|---|---|---|---|---|---|
| D | MINOR AMENDMENTS | 06.11.2018 | AF | AF | MDH |
| C | MINOR AMENDMENTS | 18.07.2017 | JZ | JC | DSL |
| B | ISSUED FOR REVIEW | 10.05.2016 | JZ | DL | DSL |
| A | ISSUED FOR REVIEW | 15.03.2016 | RJF | DL | DSL |

THIS PROJECT HAS BEEN ASSISTED BY THE LOCAL GOVERNMENT RESEARCH AND DEVELOPMENT SCHEME AND INSTITUTE OF PUBLIC WORKS ENGINEERING AUSTRALASIA

INFRASTRUCTURE GUIDELINES (SA)

SHEET TITLE

# OFFSET SIDE ENTRY PIT WITH 900mm INLET GRATE

SCALE
NTS @ A3

DRAWING No.
SD 340

REV
D

## BANDAGE JOINT NOTES:

1. ALL CONCRETE WORKS TO BE 32MPa UNLESS NOTED OTHERWISE.
2. 'DENSO 600' TAPE OR SIMILAR APPROVED SHALL BE USED. TAPE TO BE 200mm MIN. WIDTH AND LAPPED 100mm MIN. TAPE IS TO BE INSTALLED IN ACCORDANCE WITH THE MANUFACTURER'S SPECIFICATIONS.
3. MORTAR MIX TO CONSIST OF 3 PARTS SAND TO 1 PART CEMENT BY VOLUME.
4. MAXIMUM DEFLECTION ANGLE

| PIPE SIZE | MAXIMUM DEFLECTION ANGLE |
|---|---|
| • 300Ø | 16° |
| • 600Ø | 14° |
| • 900Ø | 12° |
| • 1800Ø | 6° |

PREFABRICATED SPLAYS SHALL BE USED WHERE DEFLECTION EXCEED ABOVE ANGLES

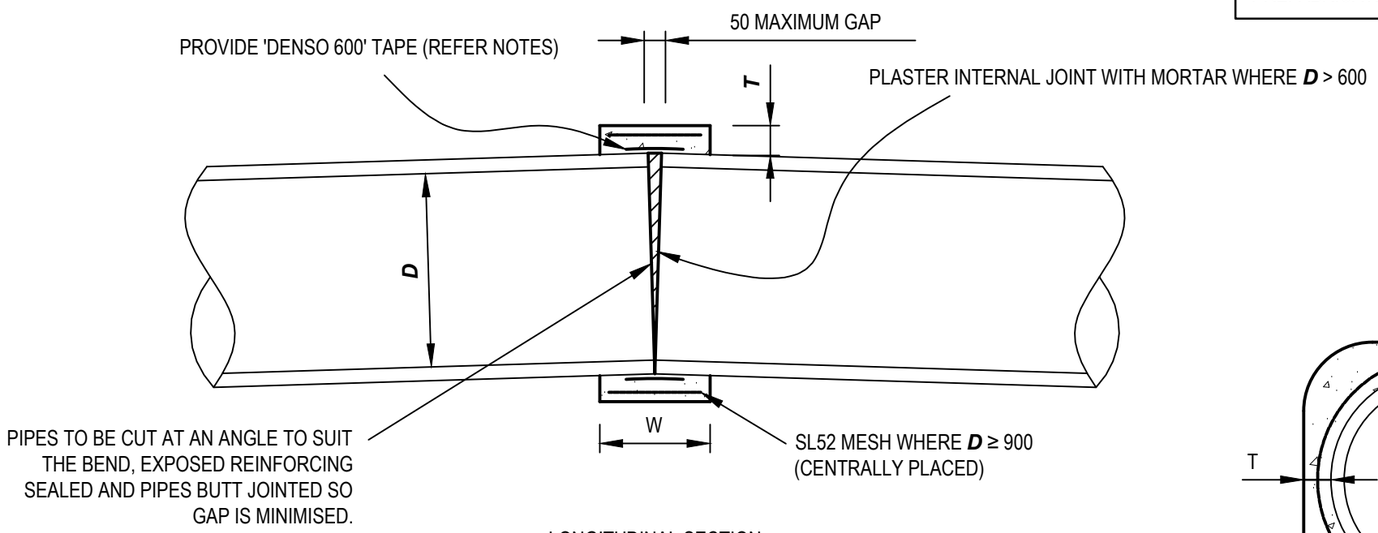


LONGITUDINAL SECTION

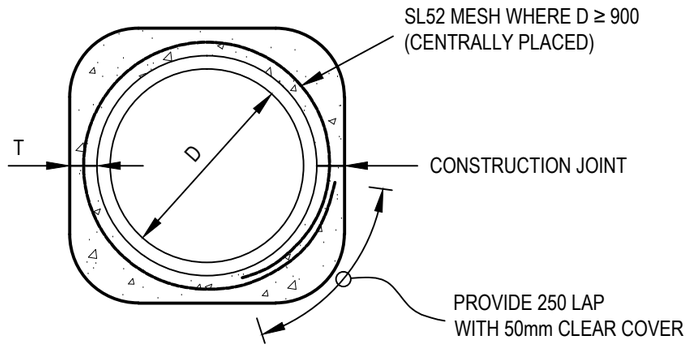


CROSS-SECTION

BANDAGE JOINT

FOR CONCRETE PIPES

NOT TO SCALE

| BANDAGE JOINT REQUIREMENTS | | |
|---|---|---|
| PIPE DIAMETER (D) | THICKNESS (T) | WIDTH (W) |
| D < 900 | 100 | 400 |
| D ≥ 900 | 150 | 600 |

ALL MEASUREMENTS IN MILLIMETRES

| REV | DESCRIPTION | DATE | DES | DRW | APP |
|---|---|---|---|---|---|
| A | ISSUED FOR REVIEW | 06.11.2018 | AF | AF | MDH |

THIS PROJECT HAS BEEN ASSISTED BY THE LOCAL GOVERNMENT RESEARCH AND DEVELOPMENT SCHEME AND INSTITUTE OF PUBLIC WORKS ENGINEERING AUSTRALASIA

INFRASTRUCTURE GUIDELINES (SA)

SHEET TITLE
BANDAGE JOINT

SCALE
NTS @ A3

DRAWING No.
SD 341

REV
A

## NOTES:

1. STREAMLINING AT UPSTREAM END ONLY
2. SCOUR PROTECTION AT OUTLET AS SHOWN, UNLESS OTHERWISE APPROVED.
3. APPROVED PRECAST HEADWALLS MAY BE USED AS AN ALTERNATIVE .
4. MINIMUM COVER TO PIPES TO BE 300mm.
5. MINIMUM FABRIC LAP 300mm
6. CONCRETE GRADE TO BE N32, SLUMP 80mm IN ACCORDANCE WITH AS3600.
7. MAXIMUM BATTER SLOPE ABOVE HEADWALL 1V : 2H
8. FENCING AT TOP OF HEADWALL MAY BE REQUIRED IN LOCATION WHERE HEIGHT > 1.0m AND SITE ACCESSIBLE TO THE PUBLIC.

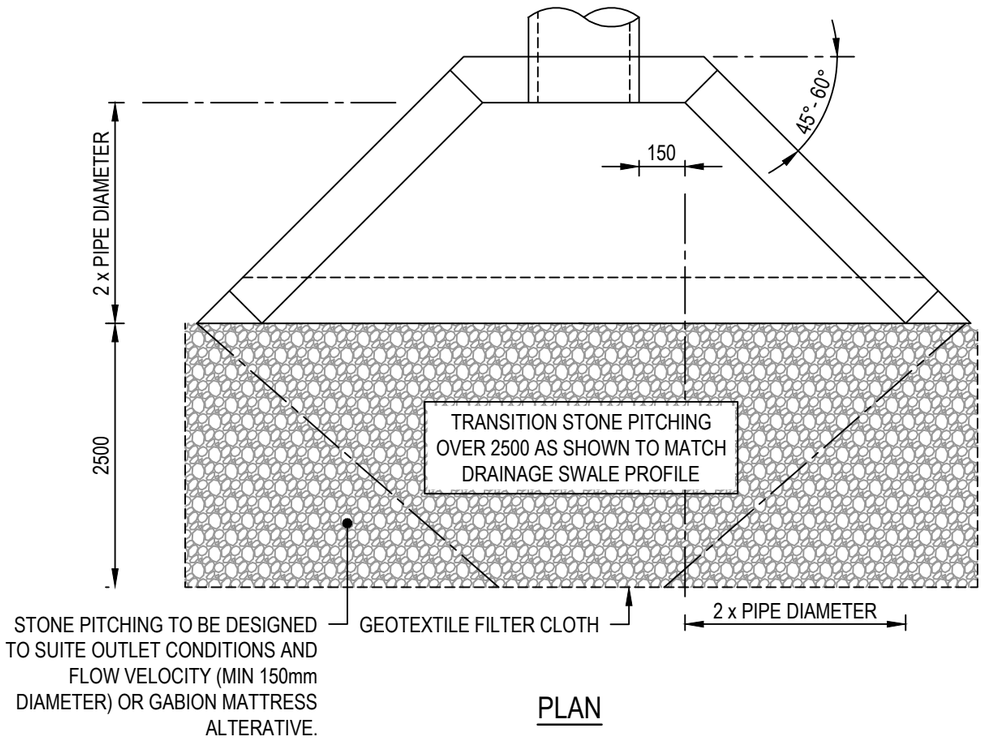


PLAN

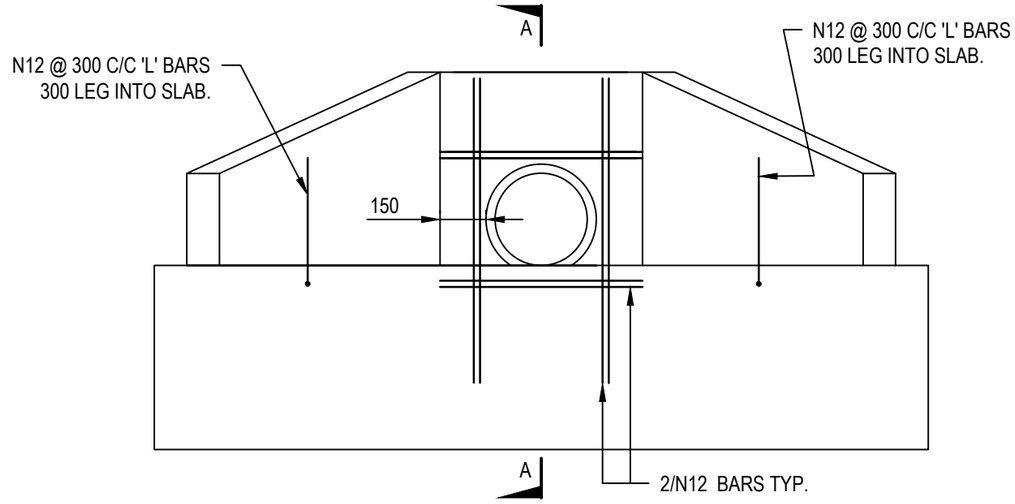


ELEVATION

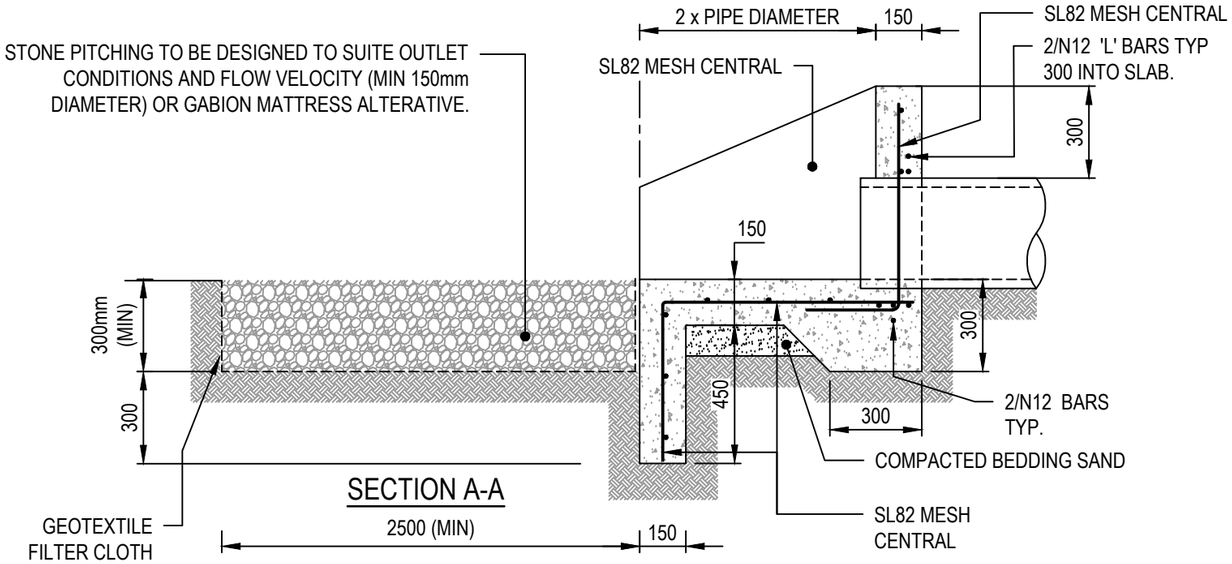


SECTION A-A

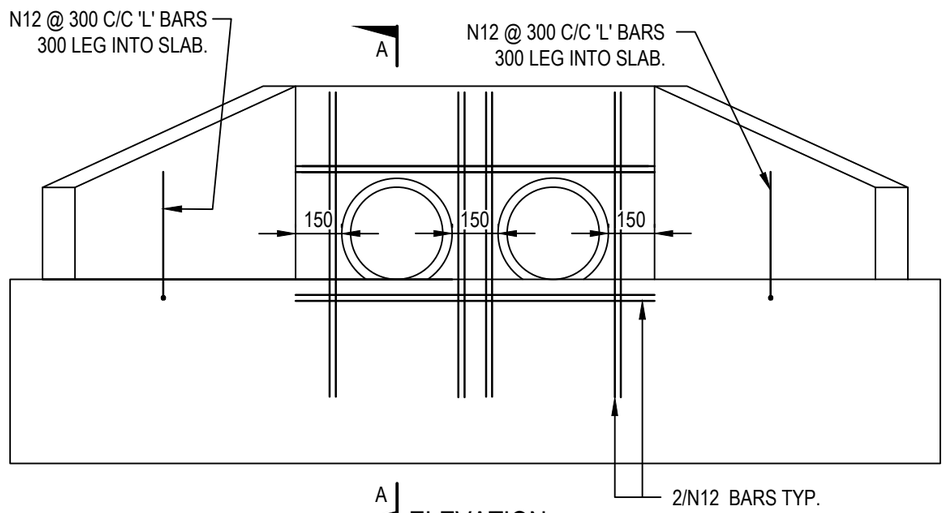


ELEVATION

ALL MEASUREMENTS IN MILLIMETRES

| REV | DESCRIPTION | DATE | DES | DRW | APP |
|---|---|---|---|---|---|
| E | MINOR AMENDMENTS | 06.11.2018 | AF | AF | MDH |
| D | ISSUED FOR REVIEW | 17.07.2017 | JZ | SGP | SH |
| C | ISSUED FOR REVIEW | 10.06.2016 | JZ | DL | DSL |
| B | ISSUED FOR REVIEW | 10.05.2016 | JZ | DL | DSL |
| A | ISSUED FOR REVIEW | 15.03.2016 | JZ | DL | DSL |

THIS PROJECT HAS BEEN ASSISTED BY THE LOCAL GOVERNMENT RESEARCH AND DEVELOPMENT SCHEME AND INSTITUTE OF PUBLIC WORKS ENGINEERING AUSTRALASIA

INFRASTRUCTURE GUIDELINES (SA)

SHEET TITLE

STANDARD HEADWALL FOR PIPES 300-375 DIAMETER

SCALE NTS @ A3

DRAWING No. SD 345

REV E

## NOTES:

1. STREAMLINING AT UPSTREAM END ONLY
2. SCOUR PROTECTION AT OUTLET AS SHOWN, UNLESS OTHERWISE APPROVED.
3. APPROVED PRECAST HEADWALLS MAY BE USED AS AN ALTERNATIVE .
4. MINIMUM COVER TO PIPES TO BE 300mm.
5. MINIMUM FABRIC LAP 300mm
6. CONCRETE GRADE TO BE N32, SLUMP 80mm IN ACCORDANCE WITH AS3600.
7. MAXIMUM BATTER SLOPE ABOVE HEADWALL 1V : 2H
8. FENCING AT TOP OF HEADWALL MAY BE REQUIRED IN LOCATION WHERE HEIGHT > 1.0m AND SITE ACCESSIBLE TO THE PUBLIC.

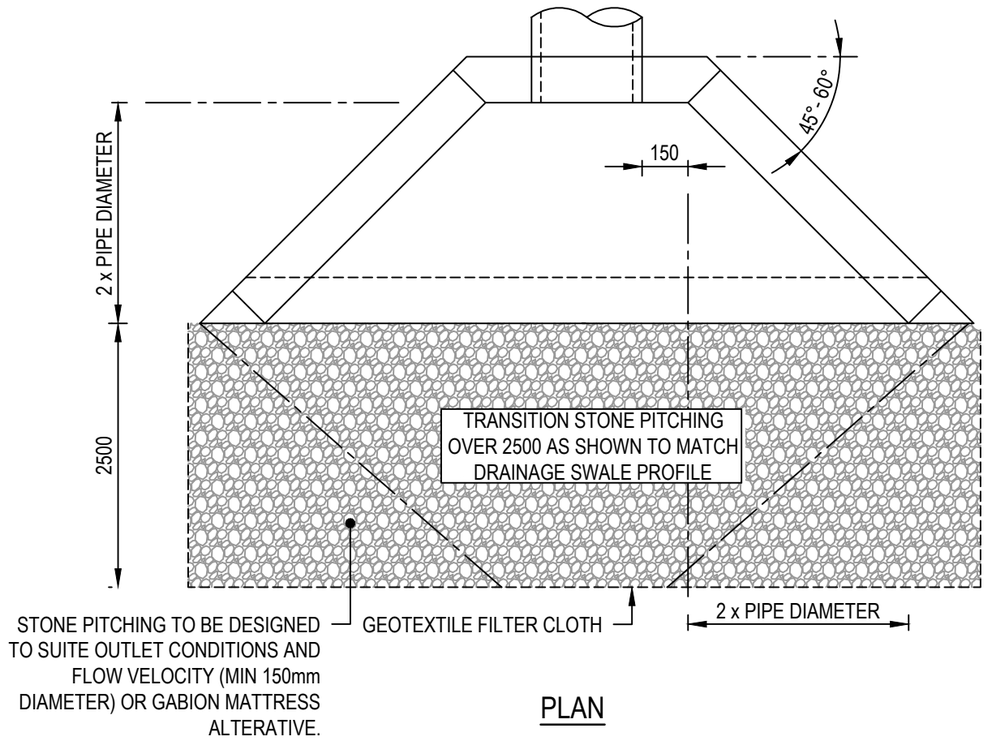


PLAN

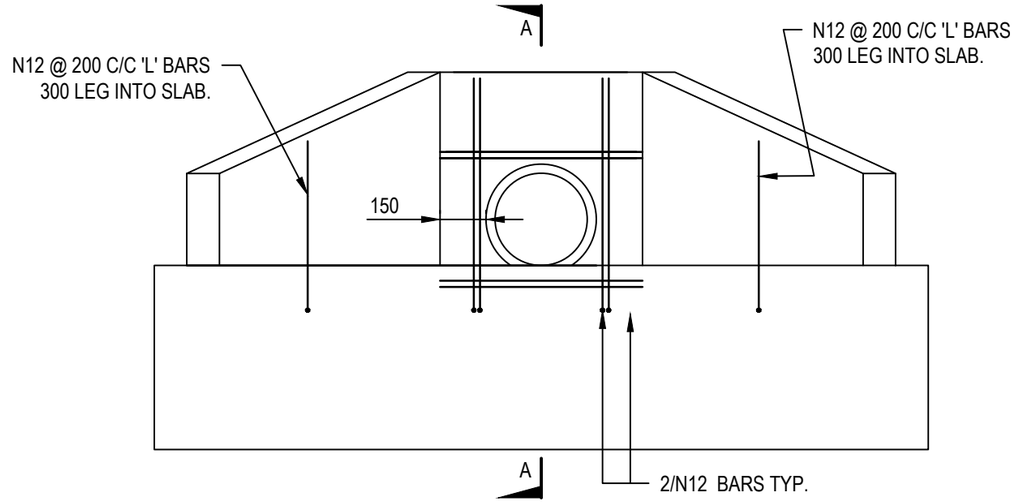


ELEVATION

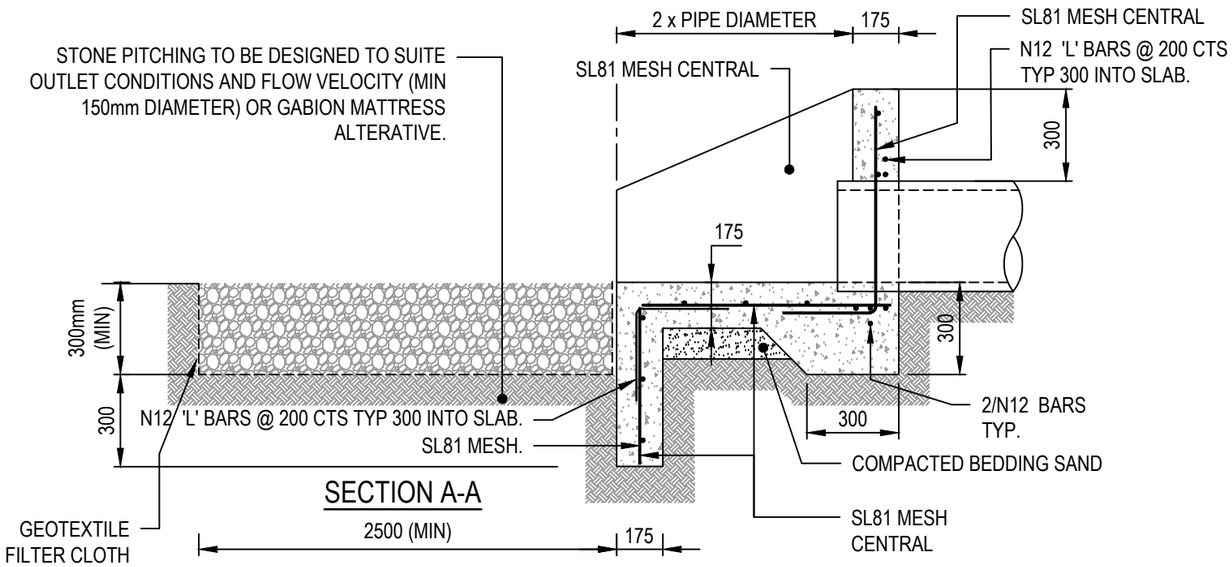


SECTION A-A

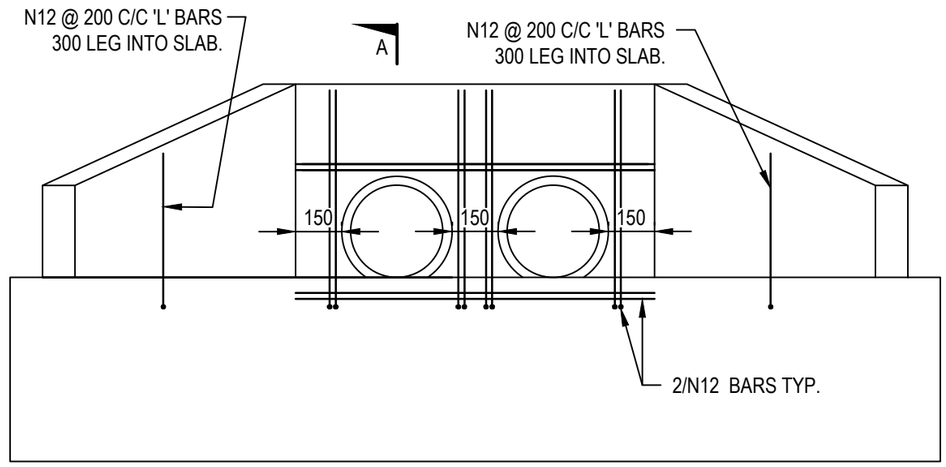


A ELEVATION

ALL MEASUREMENTS IN MILLIMETRES

| REV | DESCRIPTION | DATE | DES | DRW | APP |
|---|---|---|---|---|---|
| D | MINOR AMENDMENTS | 06.11.2018 | AF | AF | MDH |
| C | ISSUED FOR REVIEW | 17.07.2017 | JZ | SGP | SH |
| B | ISSUED FOR REVIEW | 10.05.2016 | JZ | DL | DSL |
| A | ISSUED FOR REVIEW | 15.03.2016 | JZ | DL | DSL |

THIS PROJECT HAS BEEN ASSISTED BY THE LOCAL GOVERNMENT RESEARCH AND DEVELOPMENT SCHEME AND INSTITUTE OF PUBLIC WORKS ENGINEERING AUSTRALASIA

INFRASTRUCTURE GUIDELINES (SA)

SHEET TITLE
STANDARD HEADWALL FOR PIPES 450-750 DIAMETER

SCALE
NTS @ A3

DRAWING No.
SD 350

REV
D

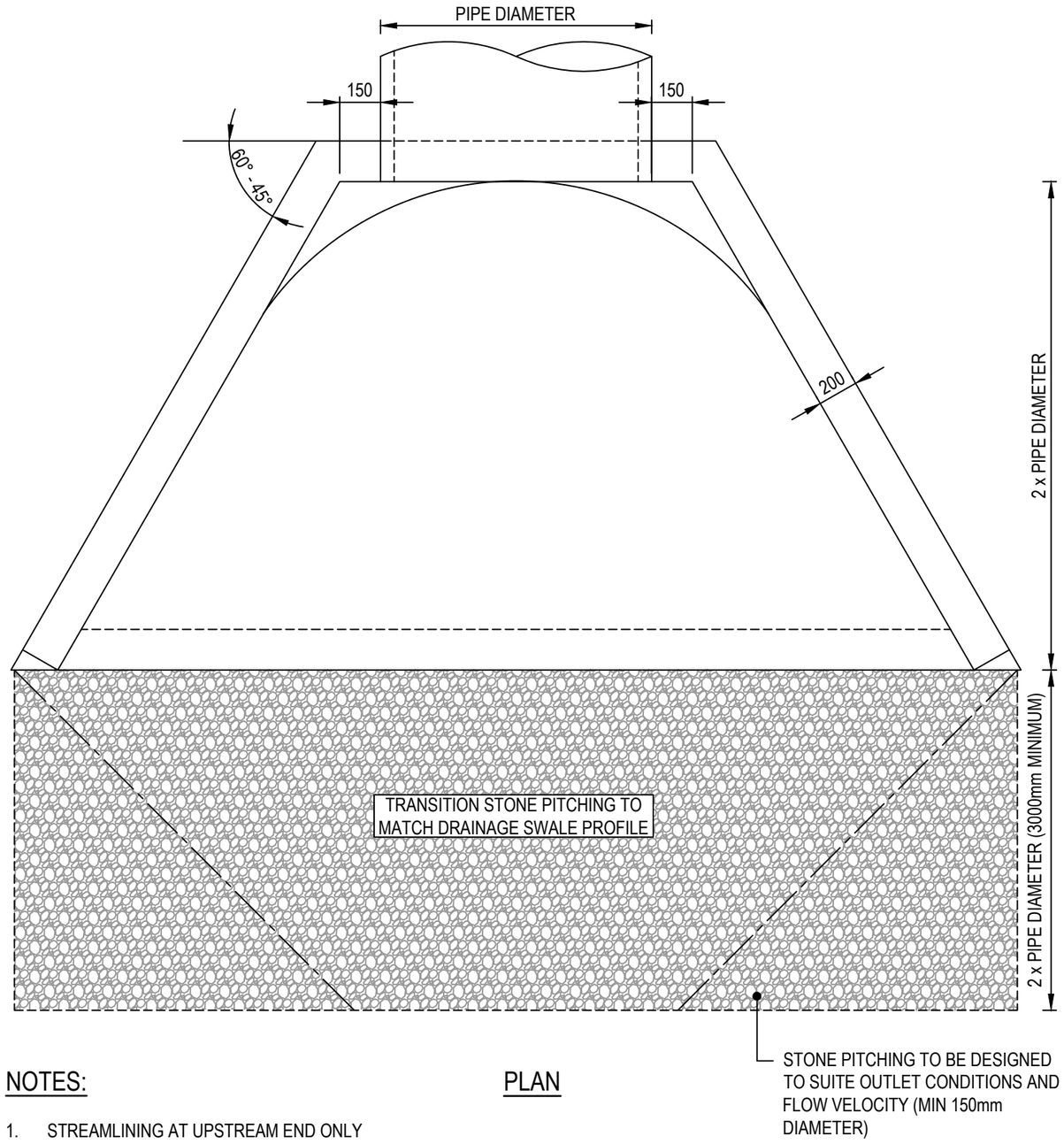


PLAN

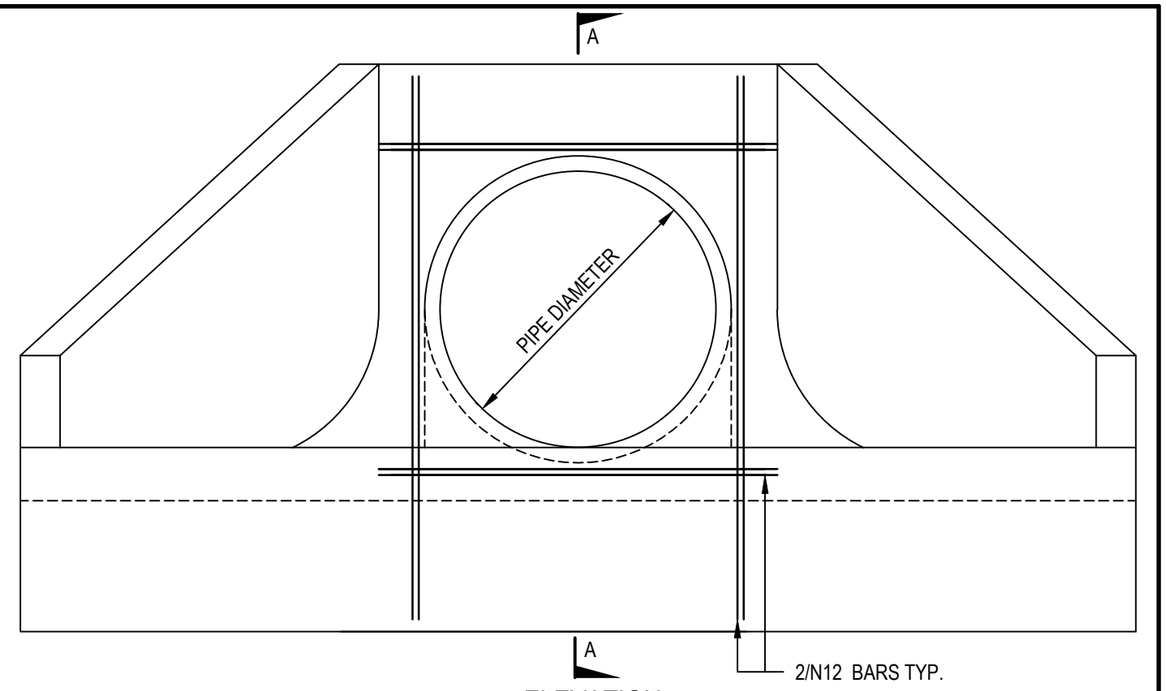


ELEVATION

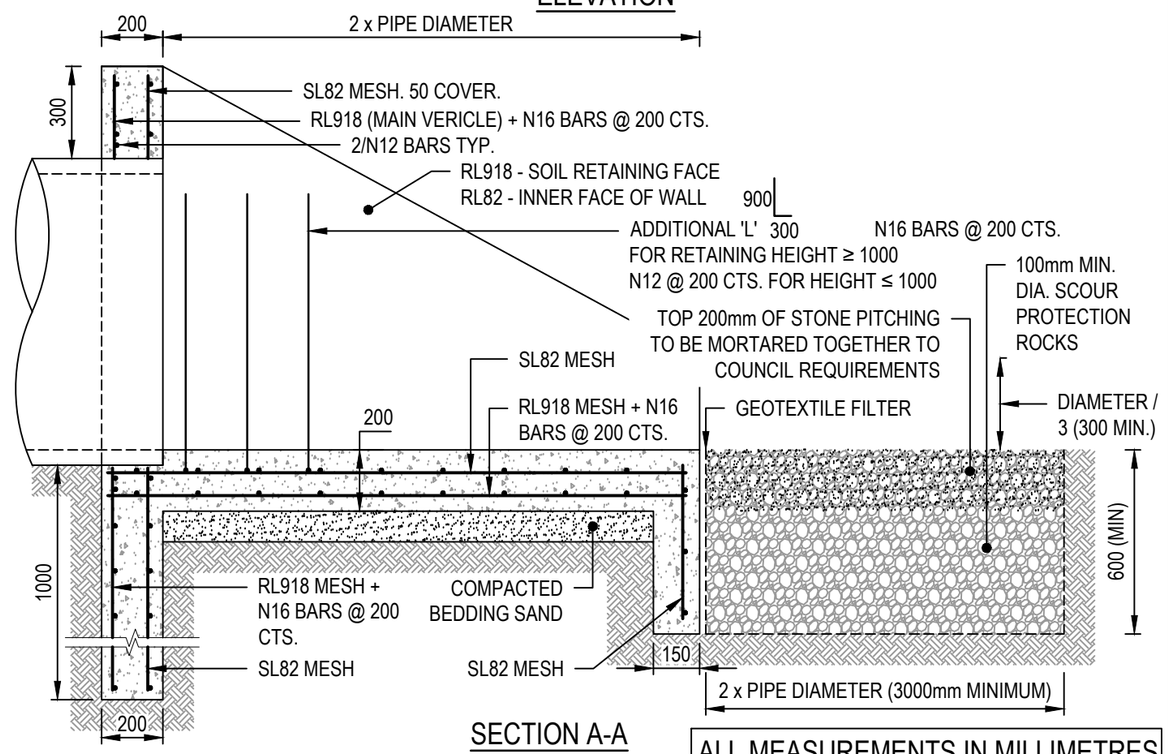


SECTION A-A

ALL MEASUREMENTS IN MILLIMETRES

## NOTES:

1. STREAMLINING AT UPSTREAM END ONLY
2. SCOUR PROTECTION AT OUTLET AS SHOWN, UNLESS OTHERWISE APPROVED.
3. APPROVED PRECAST HEADWALLS MAY BE USED AS AN ALTERNATIVE WITH CAST IN SITU LEGS.
4. MINIMUM COVER TO PIPES TO BE 300mm
5. MINIMUM FABRIC LAP 300mm
6. CONCRETE GRADE TO BE N32, SLUMP 80mm IN ACCORDANCE WITH AS3600.
7. FENCING AT TOP OF HEADWALL MAY BE REQUIRED IN LOCATION WHERE HEIGHT > 1.0m AND SITE ACCESSIBLE TO THE PUBLIC.
8. ALTERNATE SCOUR PROTECTION INCLUDING MATTRESSES AT OUTLET OF HEADWALL ACCEPTABLE SUBJECT TO DESIGN BASED ON FLOW RATE AND VELOCITY.
9. MAXIMUM BATTER SLOPE 1V : 2H

| REV | DESCRIPTION | DATE | DES | DRW | APP |
|---|---|---|---|---|---|
| D | MINOR AMENDMENTS | 06.11.2018 | AF | AF | MDH |
| C | ISSUED FOR REVIEW | 10.06.2016 | JZ | DL | DSL |
| B | ISSUED FOR REVIEW | 10.05.2016 | JZ | DL | DSL |
| A | ISSUED FOR REVIEW | 15.03.2016 | JZ | DL | DSL |

THIS PROJECT HAS BEEN ASSISTED BY THE LOCAL GOVERNMENT RESEARCH AND DEVELOPMENT SCHEME AND INSTITUTE OF PUBLIC WORKS ENGINEERING AUSTRALASIA

INFRASTRUCTURE GUIDELINES (SA)

SHEET TITLE

# STANDARD HEADWALL FOR SINGLE PIPE 675-1800 DIAMETER

SCALE
NTS @ A3

DRAWING No.
SD 351

REV
D

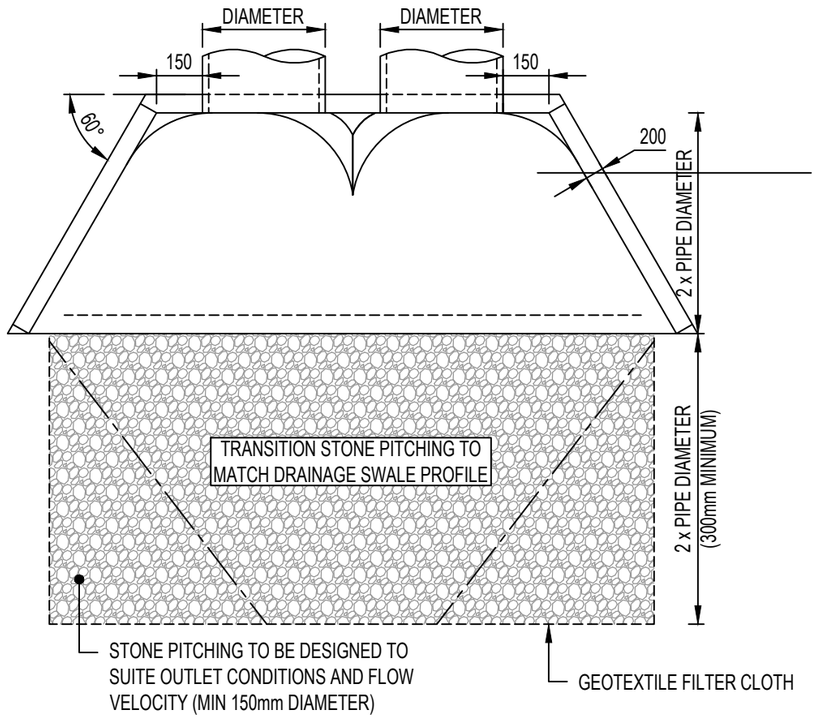


PLAN
SCALE 1:50

## NOTES:

1. STREAMLINING AT UPSTREAM END ONLY
2. SCOUR PROTECTION AT OUTLET AS SHOWN, UNLESS OTHERWISE APPROVED.
3. APPROVED PRECAST HEADWALLS MAY BE USED AS AN ALTERNATIVE.
4. MINIMUM COVER TO PIPES TO BE 300mm
5. MINIMUM FABRIC LAP 300mm
6. CONCRETE GRADE TO BE N32, SLUMP 80mm IN ACCORDANCE WITH AS3600.
7. FENCING AT TOP OF HEADWALL MAY BE REQUIRED IN LOCATION WHERE HEIGHT > 1.0m AND SITE ACCESSIBLE TO THE PUBLIC.
8. ALTERNATE SCOUR PROTECTION INCLUDING MATTRESSES AT OUTLET OF HEADWALL ACCEPTABLE SUBJECT TO DESIGN BASED ON FLOW RATE AND VELOCITY.
9. MAXIMUM BATTER SLOPE 1V : 2H

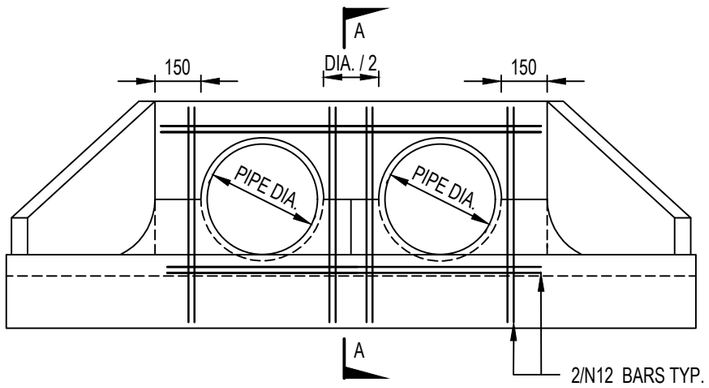


ELEVATION
SCALE 1:50

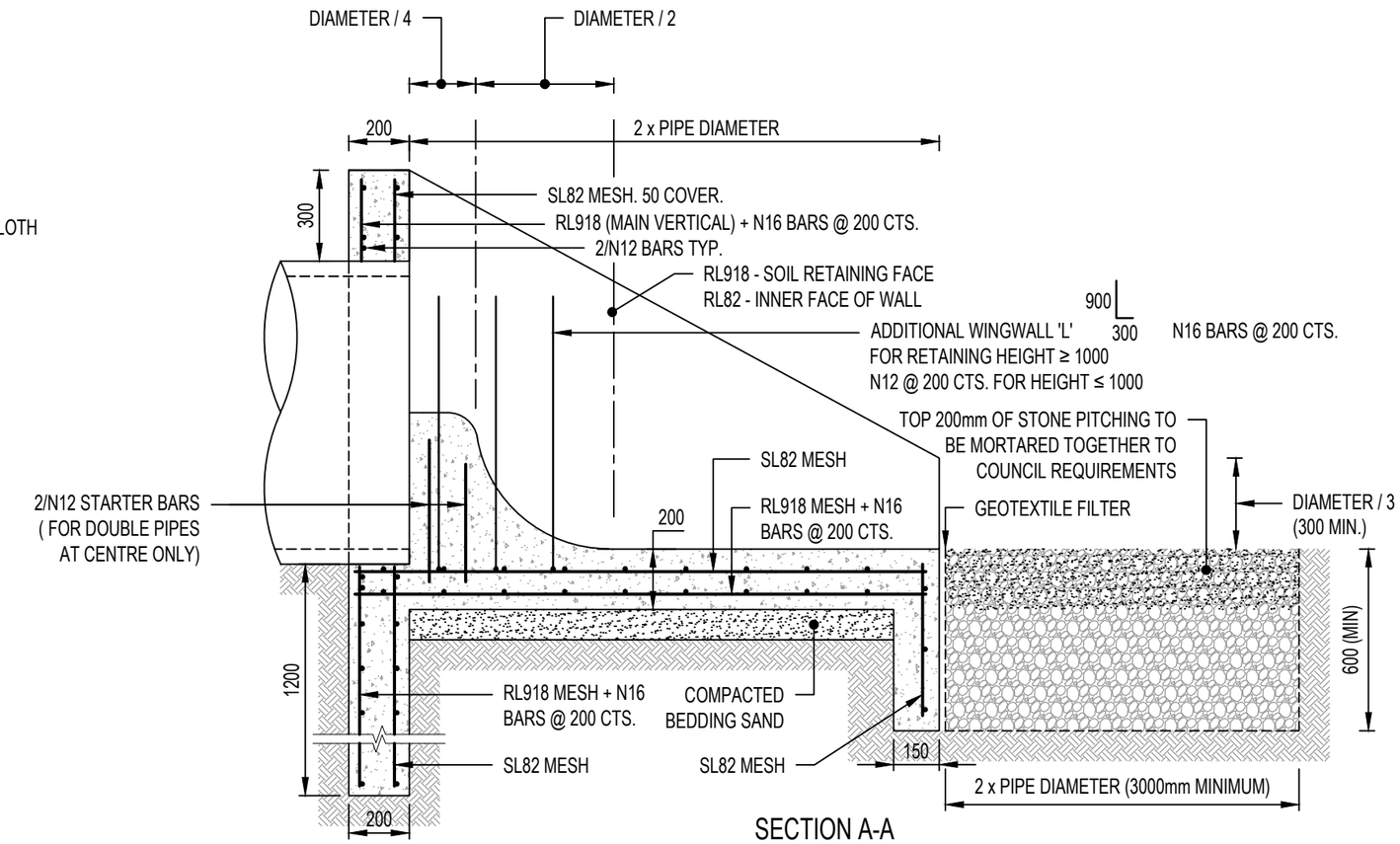


SECTION A-A

ALL MEASUREMENTS IN MILLIMETRES

| REV | DESCRIPTION | DATE | DES | DRW | APP |
|---|---|---|---|---|---|
| D | ISSUED FOR REVIEW | 17.07.2017 | JZ | SGP | SH |
| C | ISSUED FOR REVIEW | 10.06.2016 | JZ | DL | DSL |
| B | ISSUED FOR REVIEW | 10.05.2016 | JZ | DL | DSL |
| A | ISSUED FOR REVIEW | 15.03.2016 | JZ | DL | DSL |

THIS PROJECT HAS BEEN ASSISTED BY THE LOCAL GOVERNMENT RESEARCH AND DEVELOPMENT SCHEME AND INSTITUTE OF PUBLIC WORKS ENGINEERING AUSTRALASIA

INFRASTRUCTURE GUIDELINES (SA)

SHEET TITLE
STANDARD HEADWALL FOR TWIN PIPES
825-1800 DIAMETER

SCALE
AS SHOWN @ A3

DRAWING No. SD 355

REV D

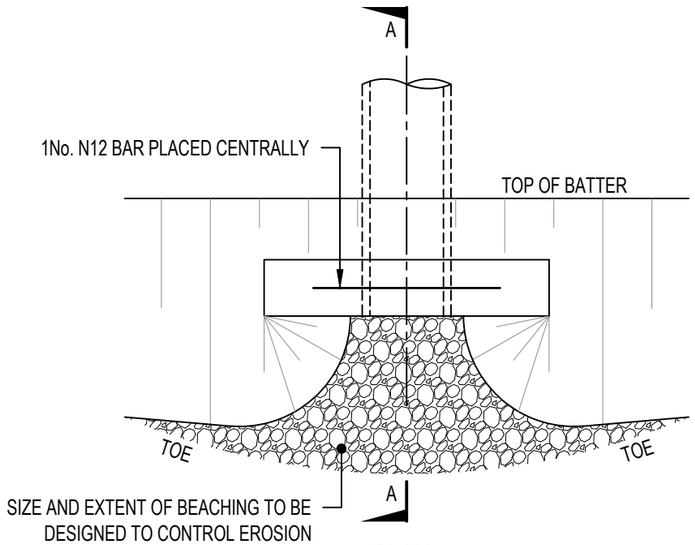


PLAN

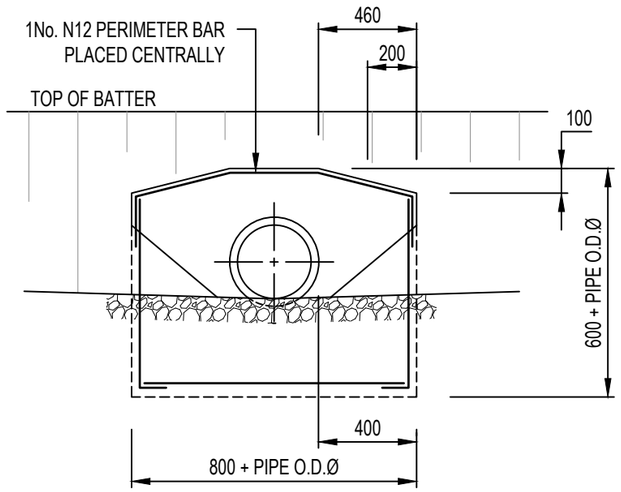


END ELEVATION

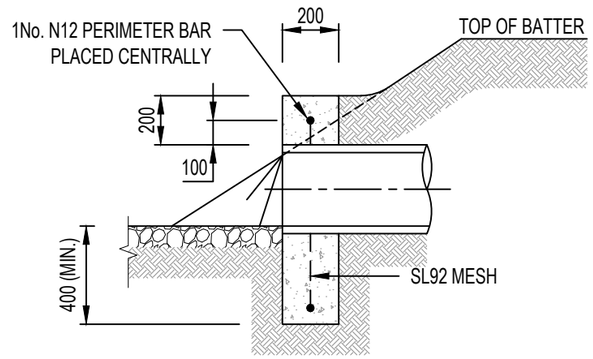


SECTION A-A

## NOTES:

1. COMPACTION PRESSURE BEHIND ENDWALLS IS NOT TO EXCEED 12.5kPa. REFER (1.5 TONNE VIBRATORY ROLLER).
2. A MAXIMUM PIPE SIZE OF 300Ø FOR THIS ENDWALL ARRANGEMENT.
3. NOT TO BE USED WHERE GENERAL VEHICULAR TRAFFIC IS PRESENT (MAINTENANCE OR EMERGENCY VEHICLES EXCEPTED).
4. ALTERNATIVELY PRECAST ENDWALL MAY BE USED WHERE APPROVED BY COUNCIL.
5. CONCRETE STRENGTH F'C = 25 MPa (MIN.) AT 28 DAYS.
6. MAXIMUM BATTER SLOPE 1V : 2H

ALL MEASUREMENTS IN MILLIMETRES

| REV | DESCRIPTION | DATE | DES | DRW | APP |
|---|---|---|---|---|---|
| C | ISSUED FOR REVIEW | 10.06.2016 | JZ | DL | DSL |
| B | ISSUED FOR REVIEW | 10.05.2016 | JZ | DL | DSL |
| A | ISSUED FOR REVIEW | 15.03.2016 | JZ | DL | DSL |

THIS PROJECT HAS BEEN ASSISTED BY THE LOCAL GOVERNMENT RESEARCH AND DEVELOPMENT SCHEME AND INSTITUTE OF PUBLIC WORKS ENGINEERING AUSTRALASIA

INFRASTRUCTURE GUIDELINES (SA)

SHEET TITLE

CONCRETE ENDWALL FOR PIPES UP TO 300mmØ (WALKWAYS,PATHS AND TRACKS)

SCALE
NTS @ A3

DRAWING No.
SD 365

REV
C

NOTE:

1. MAXIMUM OUTLET PIPE 600mm.

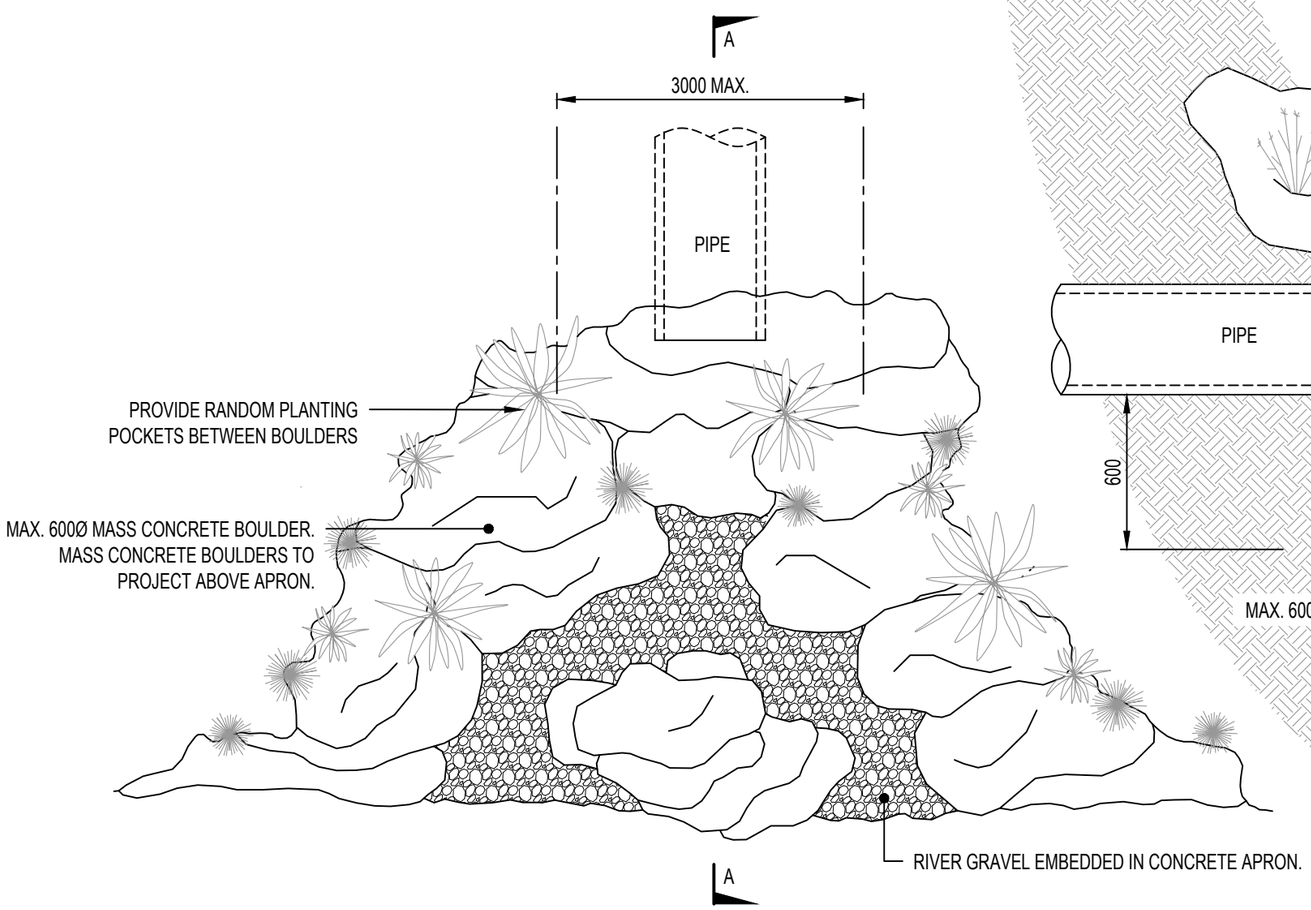


PLAN

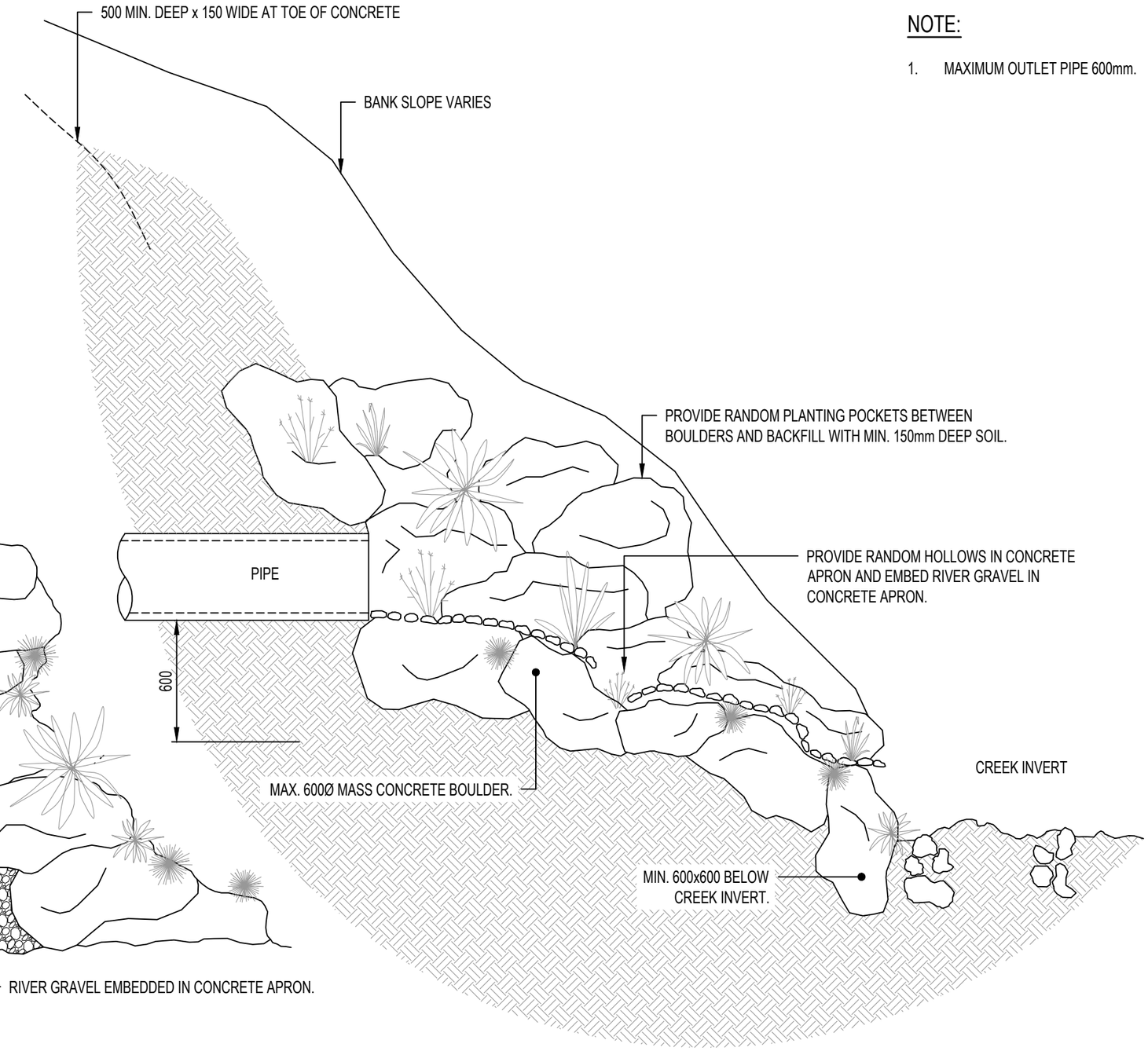


SECTION A-A

ALL MEASUREMENTS IN MILLIMETRES

| REV | DESCRIPTION | DATE | DES | DRW | APP |
|---|---|---|---|---|---|
| C | ISSUED FOR REVIEW | 10.06.2016 | JZ | DL | DSL |
| B | ISSUED FOR REVIEW | 10.05.2016 | JZ | DL | DSL |
| A | ISSUED FOR REVIEW | 15.03.2016 | JZ | DL | DSL |

THIS PROJECT HAS BEEN ASSISTED BY THE LOCAL GOVERNMENT RESEARCH AND DEVELOPMENT SCHEME AND INSTITUTE OF PUBLIC WORKS ENGINEERING AUSTRALASIA

INFRASTRUCTURE GUIDELINES (SA)

SHEET TITLE

NATURAL LOOK CONCRETE AND BOULDER HEADWALL

SCALE NTS @ A3

DRAWING No. SD 370

REV C

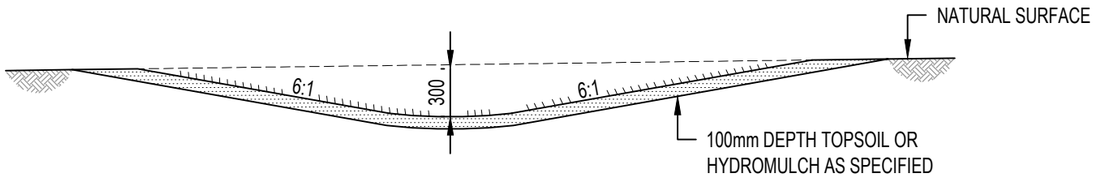


TYPICAL GRASS CATCH DRAIN SECTIONS

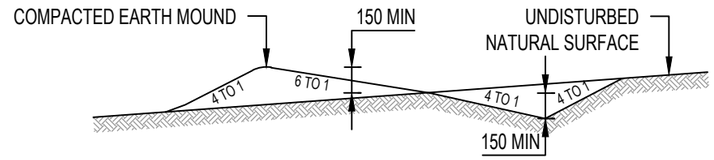


TYPICAL MOUNDED CATCH DRAIN
(ERODABLE TERRAIN)

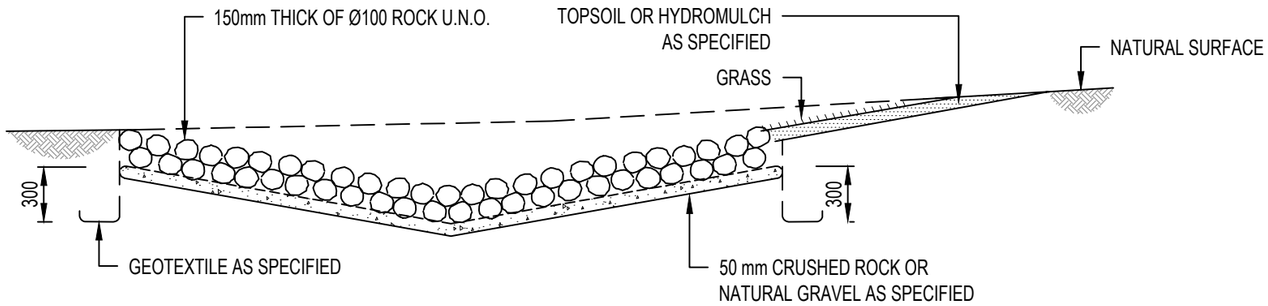


TYPICAL ROCK LINED CATCH DRAIN

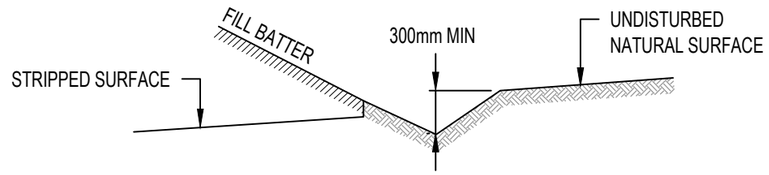


TYPICAL CATCH DRAIN AT TOE OF BATTER

## NOTES:

1. CATCH DRAINS SHALL BE CONSTRUCTED WHERE INDICATED ON ALIGNMENT PLANS.
2. CATCH DRAINS LOCATION RELATIVE TO THE BATTER SHALL BE DETERMINED BY THE COUNCIL REPRESENTATIVE.
3. CATCH DRAINS SHALL BE GRADED TO CULVERTS OR EXISTING LOW POINTS.
4. CATCH DRAINS SHALL SHALL BE SPECIFIED BY THE DESIGING AND THE LINING DETAILS BASED ON DESIGN FLOW VELOCITY, SCOUR POTENTIAL AND SOIL TYPE.
5. REFER SD 315 FOR INLET CATCH PIT DETAILS.

ALL MEASUREMENTS IN MILLIMETRES

| REV | DESCRIPTION | DATE | DES | DRW | APP |
|---|---|---|---|---|---|
| C | MINOR AMENDMENTS | 18.07.217 | JZ | JC | DSL |
| B | ISSUED FOR REVIEW | 10.05.2016 | JZ | DL | DSL |
| A | ISSUED FOR REVIEW | 15.03.2016 | JZ | DL | DSL |

THIS PROJECT HAS BEEN ASSISTED BY THE LOCAL GOVERNMENT RESEARCH AND DEVELOPMENT SCHEME AND INSTITUTE OF PUBLIC WORKS ENGINEERING AUSTRALASIA

INFRASTRUCTURE GUIDELINES (SA)

SHEET TITLE
STORMWATER CATCH DRAIN DETAILS

SCALE
NTS @ A3

DRAWING No.
SD 375

REV
C

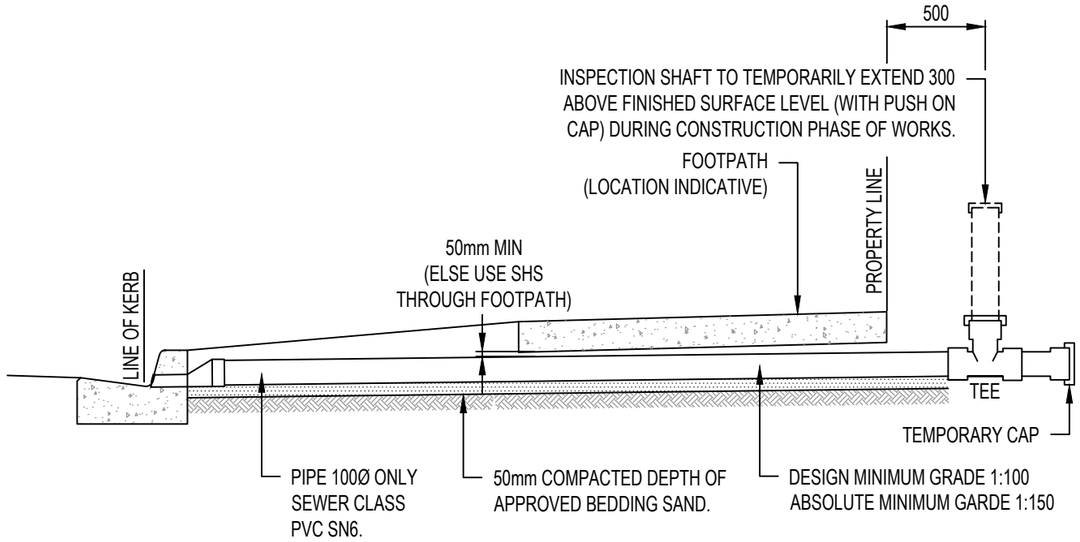


TYPICAL CROSS SECTION

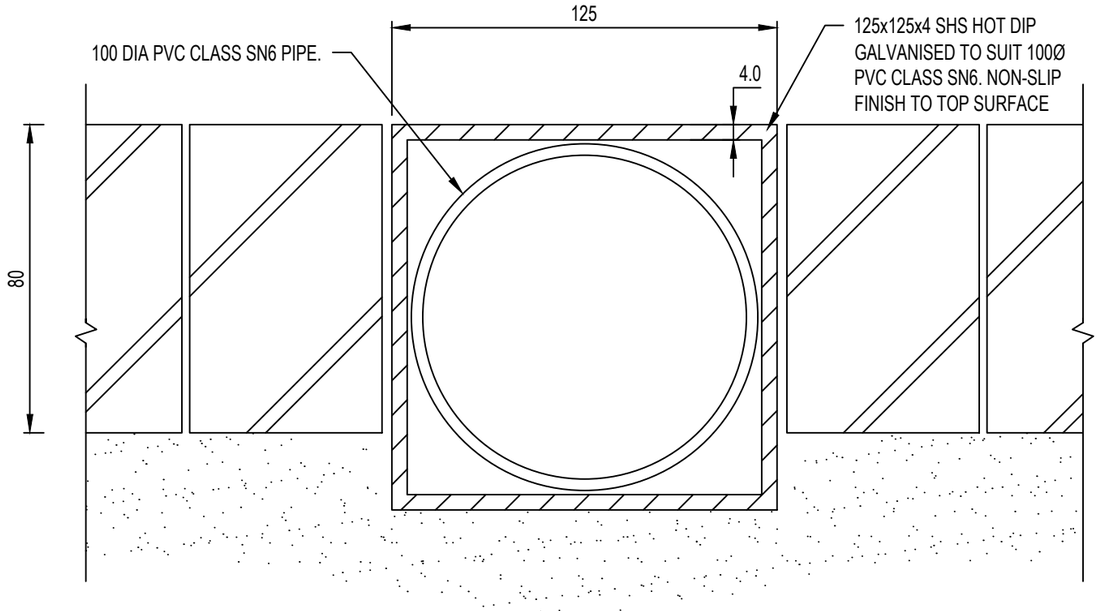


TYPICAL SHS CROSS SECTION

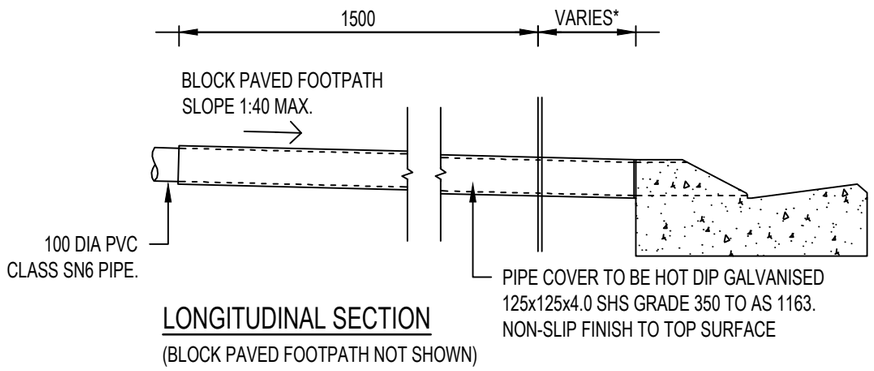


LONGITUDINAL SECTION

(BLOCK PAVED FOOTPATH NOT SHOWN)

## NOTES:

1. LOCATION OF HOUSE DRAINS WITHIN PROPERTY BOUNDARY TO BE MARKED WITH AN APPROVED TAPE TIED TO EXTEND THROUGH FINISHED SURFACE FOR EASY LOCATION BY BUILDERS.
2. PM2/20 QG OR DOLOMITE SAND BACKFILL TO BE USED.
3. REFER SD115 FOR DETAILS OF KERB ADAPTOR.
4. PROPRIETARY GALVANISED 'TOP HAT' SECTION IS SUITABLE ALTERNATIVE.

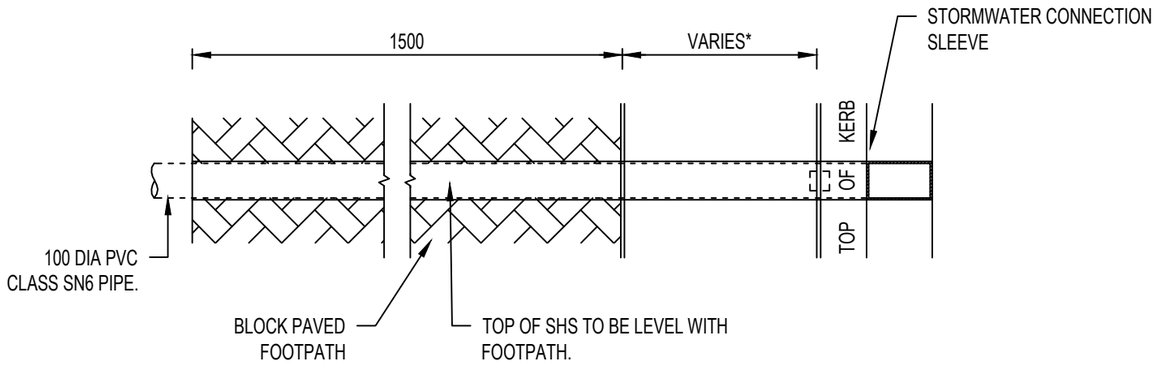


PLAN VIEW

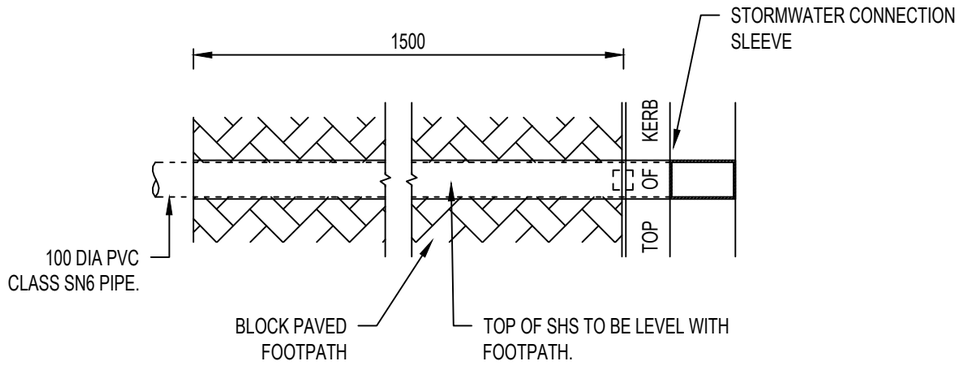


ALTERNATE PLAN VIEW

* DISTANCE TO KERB MAY VARY, REFER TO TYPICAL LAYOUT DRAWINGS.

ALL MEASUREMENTS IN MILLIMETRES

| REV | DESCRIPTION | DATE | DES | DRW | APP |
|---|---|---|---|---|---|
| C | MINOR AMENDMENTS | 18.07.2017 | JZ | JC | DSL |
| B | ISSUED FOR REVIEW | 10.05.2016 | JZ | DL | DSL |
| A | ISSUED FOR REVIEW | 15.03.2016 | JZ | DL | DSL |

THIS PROJECT HAS BEEN ASSISTED BY THE LOCAL GOVERNMENT RESEARCH AND DEVELOPMENT SCHEME AND INSTITUTE OF PUBLIC WORKS ENGINEERING AUSTRALASIA

INFRASTRUCTURE GUIDELINES (SA)

SHEET TITLE

DRAIN STORMWATER ALLOTMENT TO KERB AND CHANNEL CONNECTION

SCALE NTS @ A3

DRAWING No. SD 380

REV C

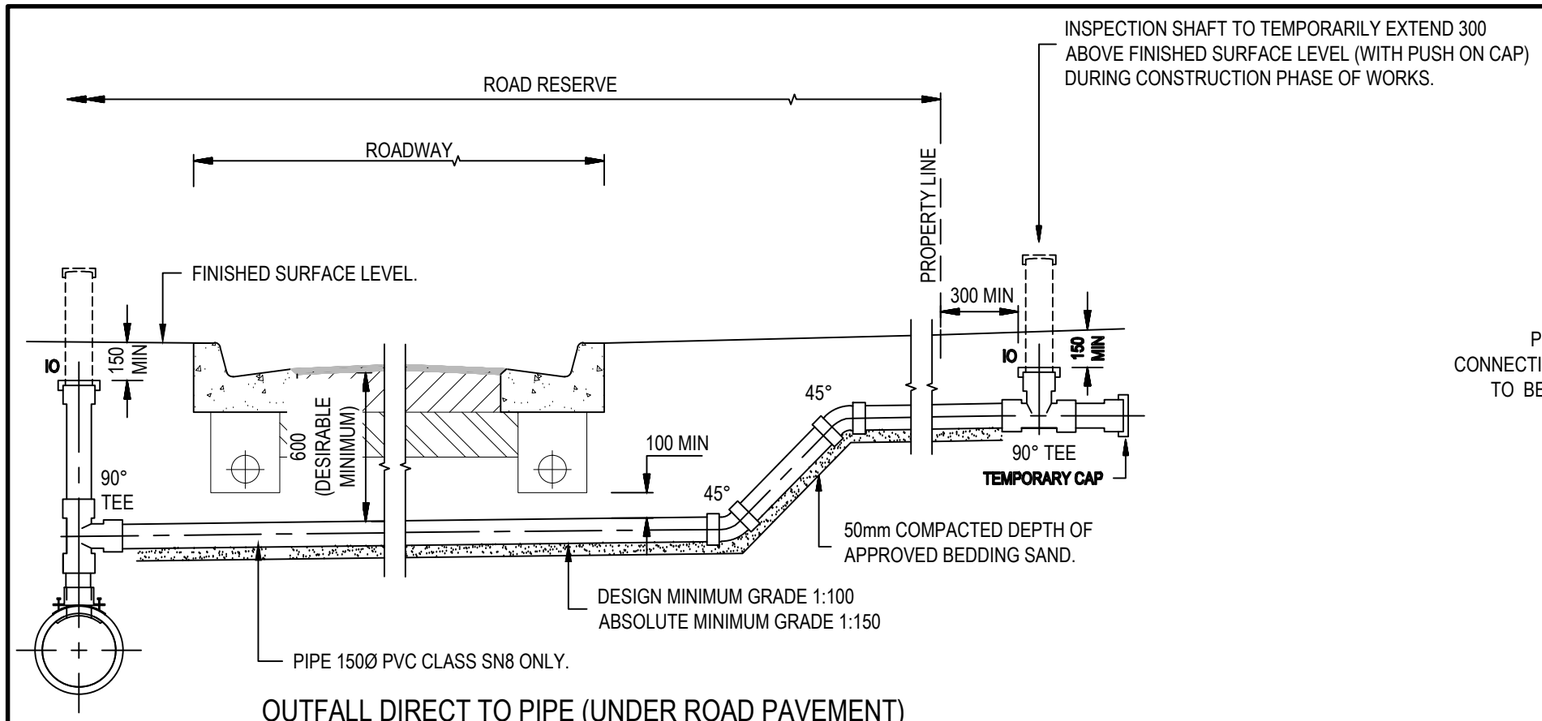


## OUTFALL DIRECT TO PIPE (UNDER ROAD PAVEMENT)

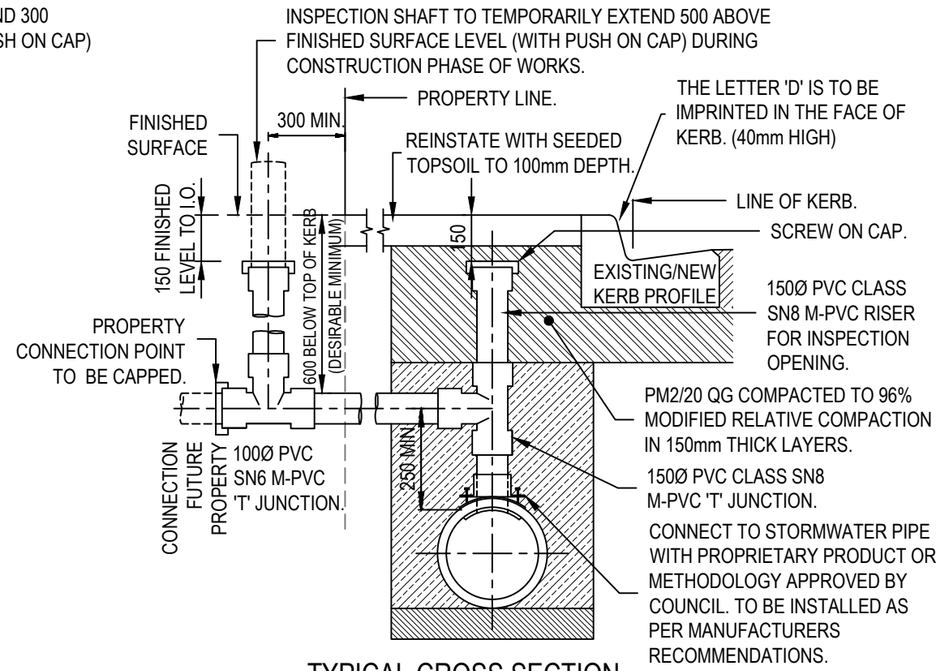


## TYPICAL CROSS SECTION

OUTFALL DIRECT TO PIPE-SAME SIDE OF ROAD

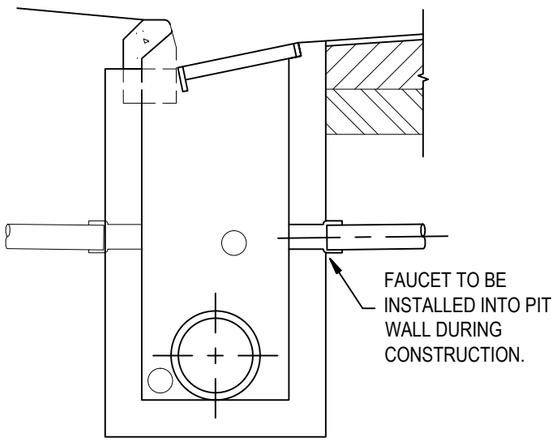


## OUTFALL DIRECT TO DRAINAGE PIT

(STREET DRAINAGE)

NOTES:

1. PM2/20 QG BACKFILL TO BE USED UNDER ROAD PAVEMENT.
2. CONCRETE KERB TO BE STAMPED WHEN CURING WITH THE LETTER 'D' ADJACENT THE HOUSE DRAIN CONNECTION POINT.

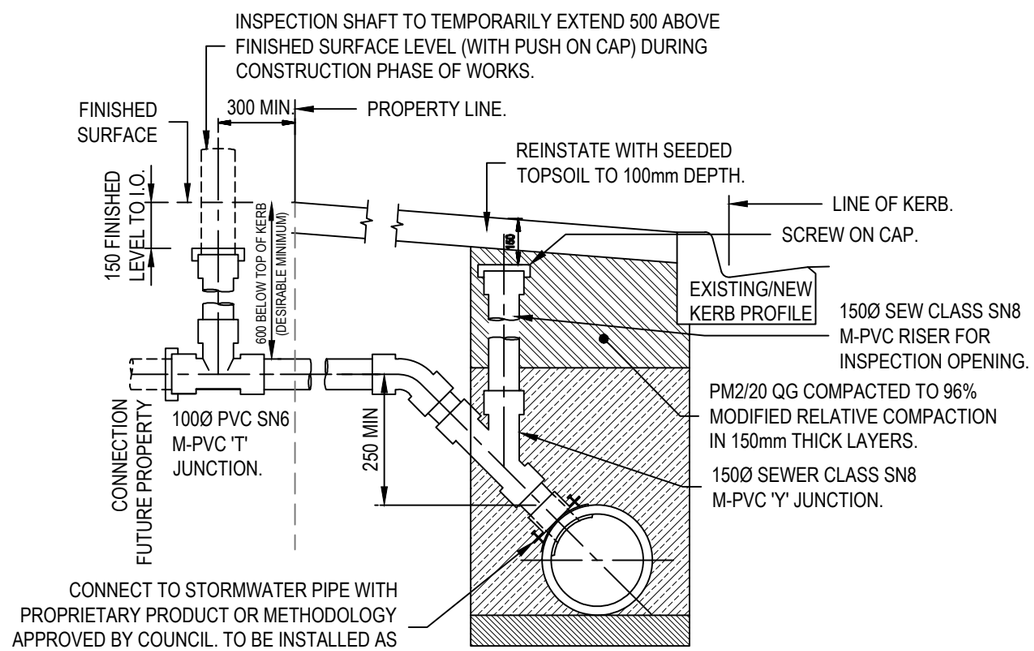


## ALTERNATIVE CROSS SECTION

CONNECTION TO PIPE WHERE AT SHALLOW DEPTH

ALL MEASUREMENTS IN MILLIMETRES

| REV | DESCRIPTION | DATE | DES | DRW | APP |
|---|---|---|---|---|---|
| D | MINOR AMENDMENTS | 06.11.2018 | AF | AF | MDH |
| C | MINOR AMENDMENTS | 18.07.2017 | JZ | JC | DSL |
| B | ISSUED FOR REVIEW | 10.05.2016 | JZ | DL | DSL |
| A | ISSUED FOR REVIEW | 15.03.2016 | JZ | DL | DSL |

THIS PROJECT HAS BEEN ASSISTED BY THE LOCAL GOVERNMENT RESEARCH AND DEVELOPMENT SCHEME AND INSTITUTE OF PUBLIC WORKS ENGINEERING AUSTRALASIA

INFRASTRUCTURE GUIDELINES (SA)

SHEET TITLE

STORMWATER ALLOTMENT DRAIN CONNECTION TO AUTHORITY PIPELINE

SCALE NTS @ A3

DRAWING No. SD 385

REV D

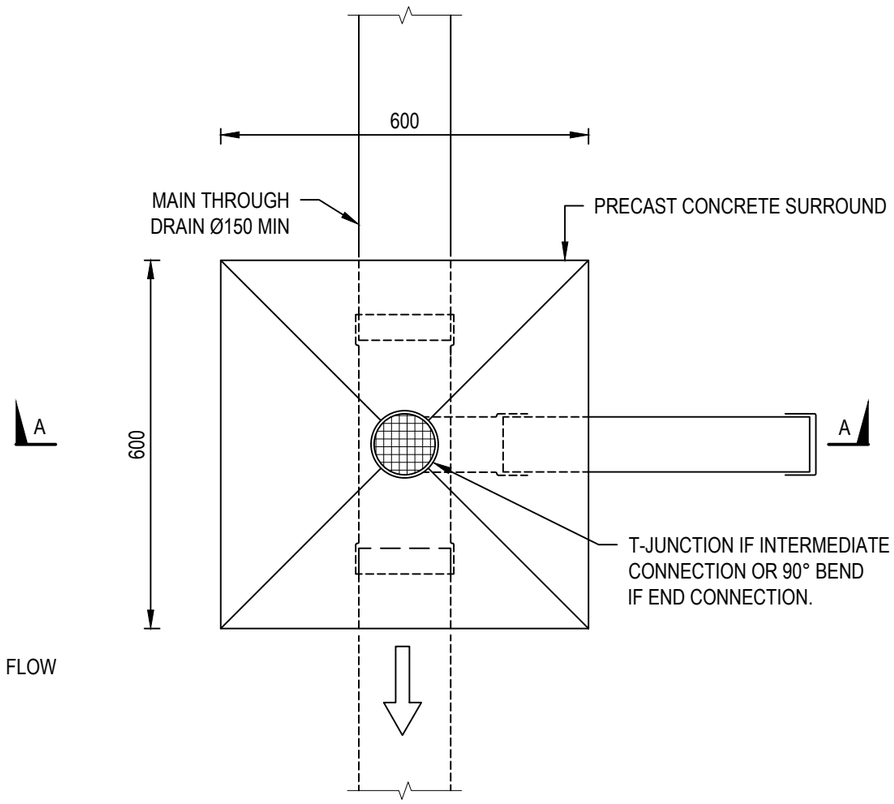


SIDE ELEVATION

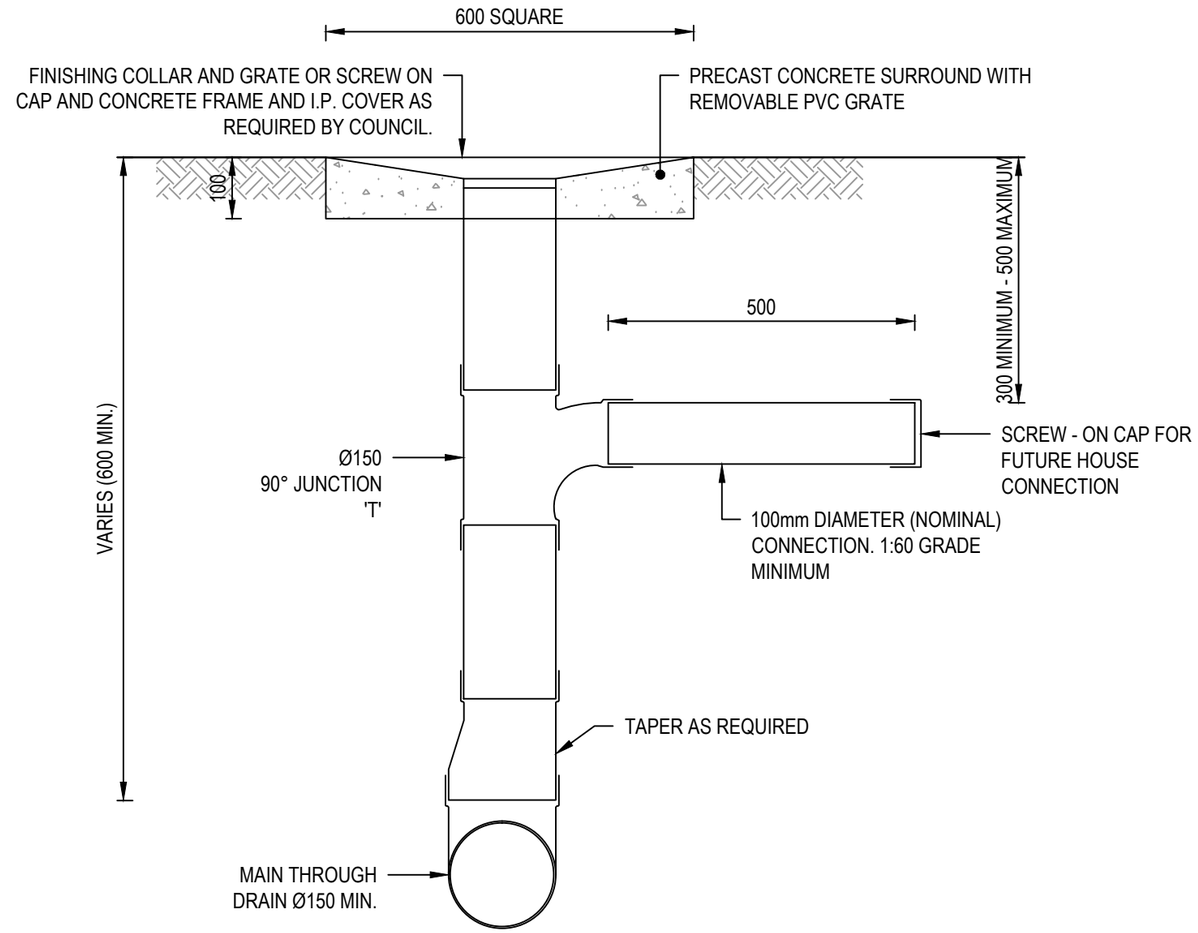


SECTION A - A

## NOTES:

1. MINIMUM COVER TO PIPES TO BE 300mm.
2. ALL STORMWATER PIPES TO BE PVC SN8 (150Ø)
   SN6 (100Ø)

ALL MEASUREMENTS IN MILLIMETRES

| REV | DESCRIPTION | DATE | DES | DRW | APP |
|---|---|---|---|---|---|
| D | MINOR AMENDMENTS | 06.11.2018 | AF | AF | MDH |
| C | MINOR AMENDMENTS | 18.07.2017 | JZ | JC | DSL |
| B | ISSUED FOR REVIEW | 10.05.2016 | JZ | DL | DSL |
| A | ISSUED FOR REVIEW | 15.03.2016 | JZ | DL | DSL |

THIS PROJECT HAS BEEN ASSISTED BY THE LOCAL GOVERNMENT RESEARCH AND DEVELOPMENT SCHEME AND INSTITUTE OF PUBLIC WORKS ENGINEERING AUSTRALASIA

INFRASTRUCTURE GUIDELINES (SA)

SHEET TITLE
STORMWATER ALLOTMENT
CONNECTION IN EASEMENT DETAIL

SCALE
NTS @ A3

DRAWING No.
SD 390

REV
D

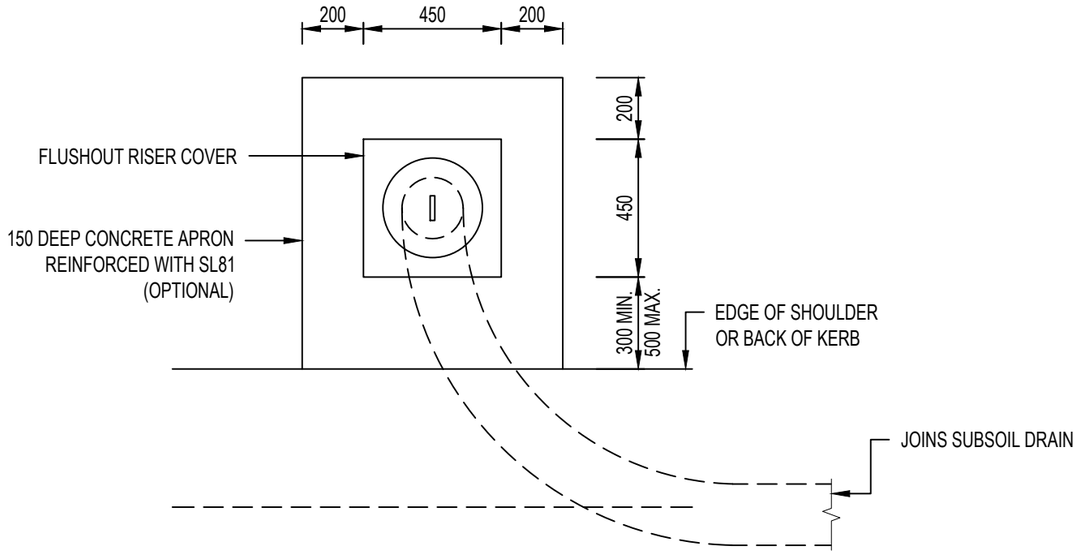


TYPICAL FLUSHOUT RISER PLAN

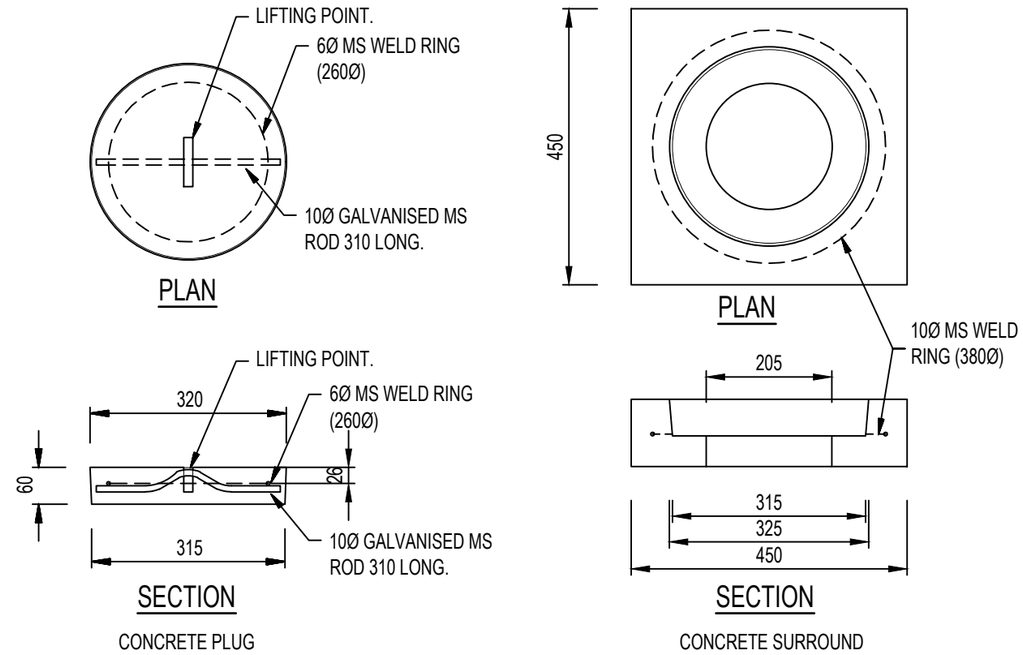


FLUSHOUT RISER COVER DETAIL

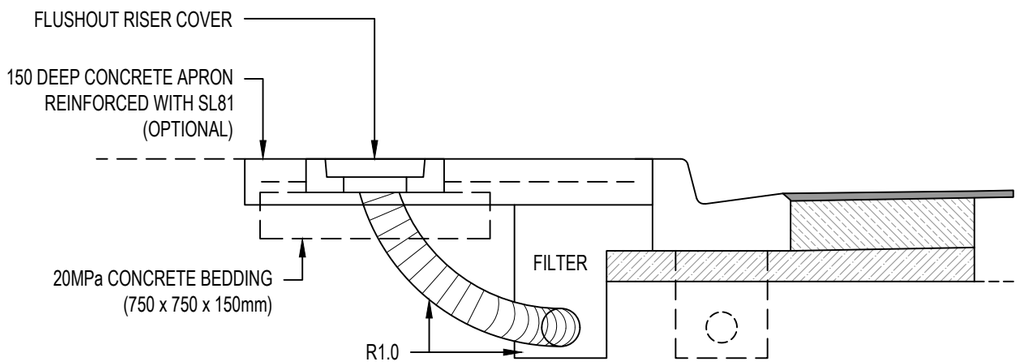


TYPICAL FLUSHOUT RISER SECTION

ALL MEASUREMENTS IN MILLIMETRES

| REV | DESCRIPTION | DATE | DES | DRW | APP |
|---|---|---|---|---|---|
| B | ISSUED FOR REVIEW | 10.05.2016 | JZ | DL | DSL |
| A | ISSUED FOR REVIEW | 15.03.2016 | JZ | DL | DSL |

THIS PROJECT HAS BEEN ASSISTED BY THE LOCAL GOVERNMENT RESEARCH AND DEVELOPMENT SCHEME AND INSTITUTE OF PUBLIC WORKS ENGINEERING AUSTRALASIA

INFRASTRUCTURE GUIDELINES (SA)

SHEET TITLE
SUBSOIL DRAINAGE FLUSHOUT RISER DETAIL

SCALE
NTS @ A3

DRAWING No.
SD 395

REV
B

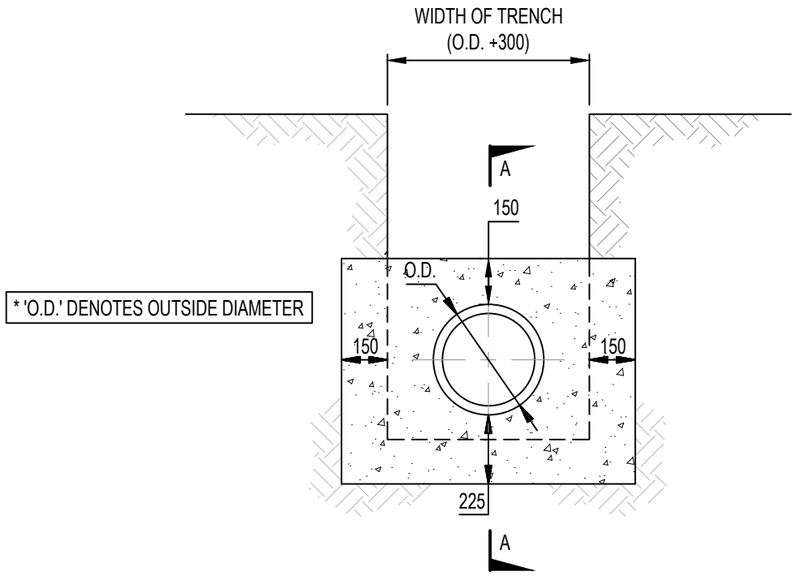


ELEVATION

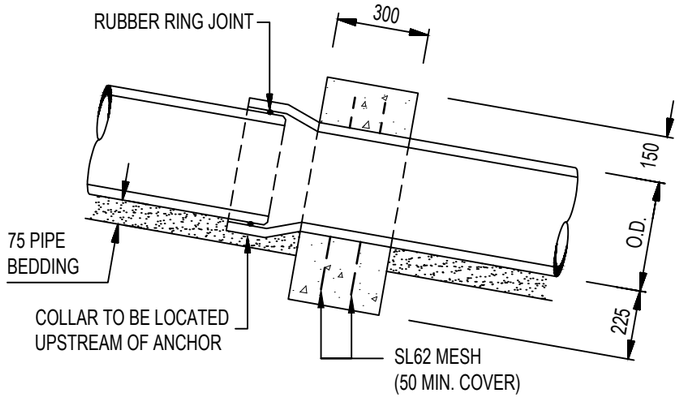


SECTION A-A

NOTES:

1. FOR USE ON PIPE AT GRADES OF 1 IN 5 OR GREATER.
2. TO BE CONSTRUCTED AT A MIN EVERY 5TH JOINT AND AT ALL STRUCTURES.
3. CONCRETE STRENGTH TO BE 25MPa.
4. RRJ PIPES TO BE USED.

ALL MEASUREMENTS IN MILLIMETRES

| REV | DESCRIPTION | DATE | DES | DRW | APP |
|---|---|---|---|---|---|
| B | ISSUED FOR REVIEW | 10.05.2016 | JZ | DL | DSL |
| A | ISSUED FOR REVIEW | 15.03.2016 | JZ | DL | DSL |

THIS PROJECT HAS BEEN ASSISTED BY THE LOCAL GOVERNMENT RESEARCH AND DEVELOPMENT SCHEME AND INSTITUTE OF PUBLIC WORKS ENGINEERING AUSTRALASIA

INFRASTRUCTURE GUIDELINES (SA)

SHEET TITLE
STORMWATER DRAINAGE PIPE ANCHOR BLOCK

SCALE
NTS @ A3

DRAWING No.
SD 400

REV
B

## NOTES:

1. PAVEMENT TO BE DETERMINED BASED ON TRAFFIC LOADING, PAVEMENT MATERIALS AND SUBGRADE STRENGTH.

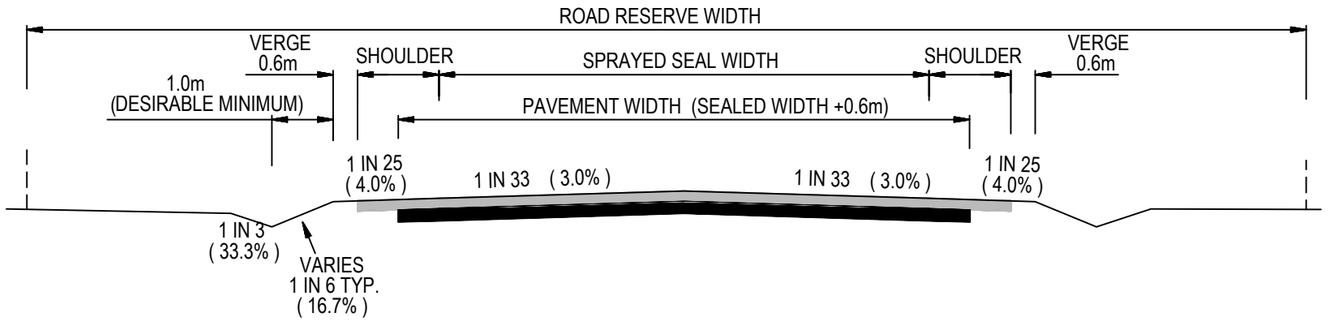


TYPICAL CROSS SECTION
(SEALED ROAD)

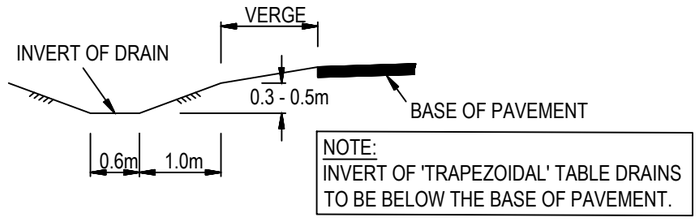


'TRAPEZOIDAL' CUT TYPE

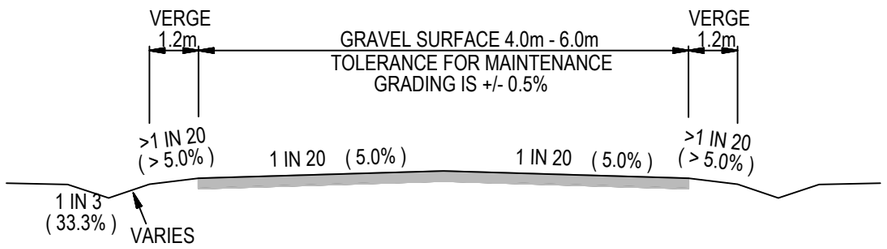


TYPICAL CROSS SECTION
(GRAVEL ROAD)

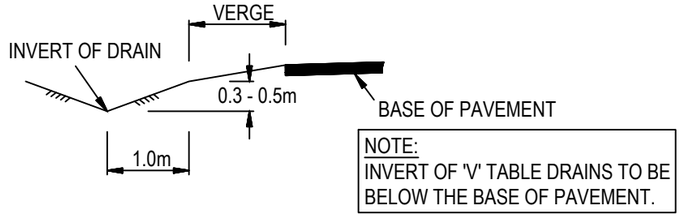


'V' CUT TYPE

TYPICAL OPEN TABLE DRAINS

| REV | DESCRIPTION | DATE | DES | DRW | APP |
|---|---|---|---|---|---|
| D | MINOR AMENDMENTS | 6.11.2018 | AF | AF | MDH |
| C | MINOR AMENDMENTS | 18.07.2017 | JZ | JC | DSL |
| B | ISSUED FOR REVIEW | 10.05.2016 | JZ | DL | DSL |
| A | ISSUED FOR REVIEW | 15.03.2016 | JZ | DL | DSL |

THIS PROJECT HAS BEEN ASSISTED BY THE LOCAL GOVERNMENT RESEARCH AND DEVELOPMENT SCHEME AND INSTITUTE OF PUBLIC WORKS ENGINEERING AUSTRALASIA

INFRASTRUCTURE GUIDELINES (SA)

SHEET TITLE
TYPICAL ROAD SECTIONS (UNKERBED)

SCALE
NTS @ A3

DRAWING No.
SD 500

REV
D

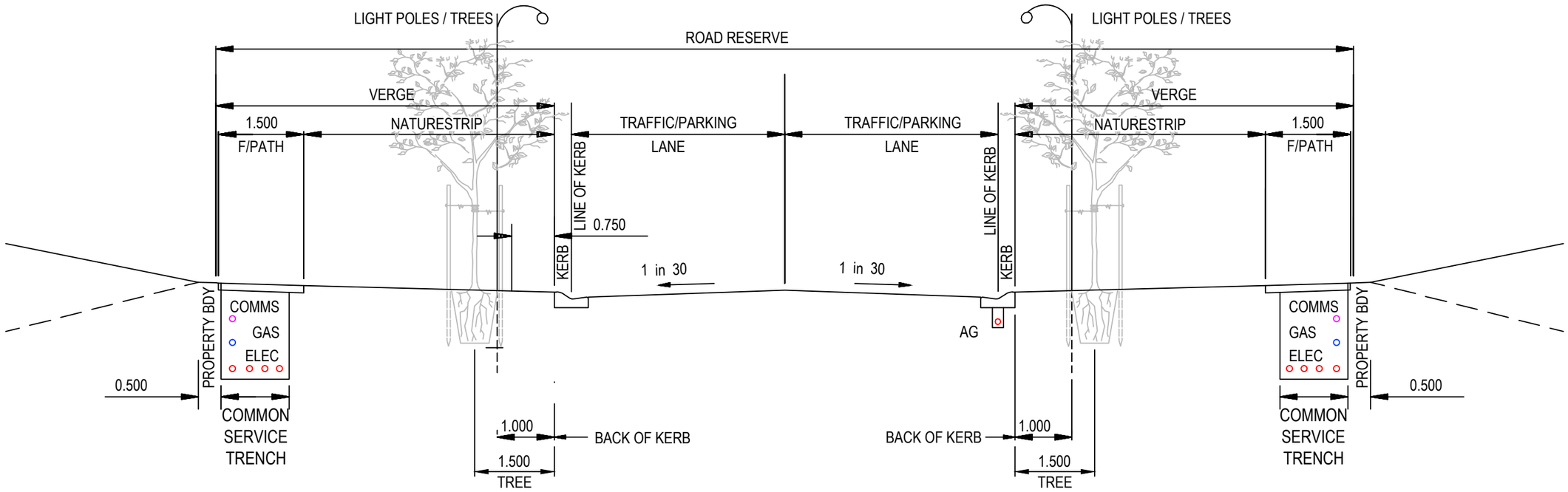


TYPICAL CROSS SECTION

ALL MEASUREMENTS IN MILLIMETRES

| REV | DESCRIPTION | DATE | DES | DRW | APP |
|---|---|---|---|---|---|
| D | ISSUED FOR REVIEW | 06.11.2018 | AF | AF | MDH |
| C | MINOR AMENDMENTS | 18.07.2017 | JZ | JC | DSL |
| B | ISSUED FOR REVIEW | 10.05.2016 | JZ | DL | DSL |
| A | ISSUED FOR REVIEW | 15.03.2016 | JZ | DL | DSL |

THIS PROJECT HAS BEEN ASSISTED BY THE LOCAL GOVERNMENT RESEARCH AND DEVELOPMENT SCHEME AND INSTITUTE OF PUBLIC WORKS ENGINEERING AUSTRALASIA

INFRASTRUCTURE GUIDELINES (SA)

SHEET TITLE

TYPICAL ROAD SECTION LAYOUT
(KERBED RESIDENTIAL STREET)

SCALE
NTS @ A3

DRAWING No.
SD 505

REV
D

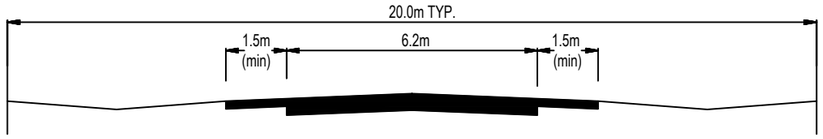


RURAL LIVING ACCESS ROAD

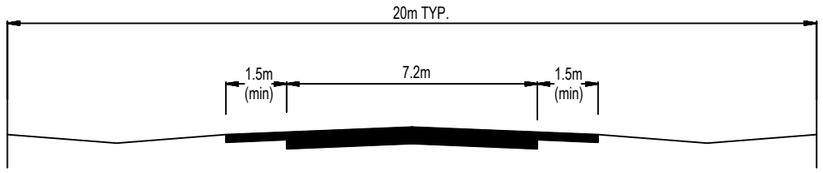


RURAL LIVING COLLECTOR ROAD

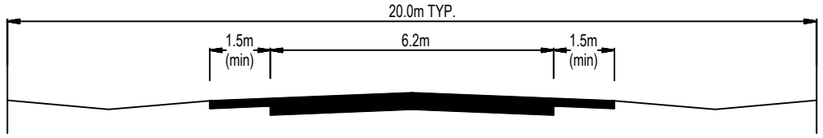


LOW DENSITY RESIDENTIAL ACCESS ROAD

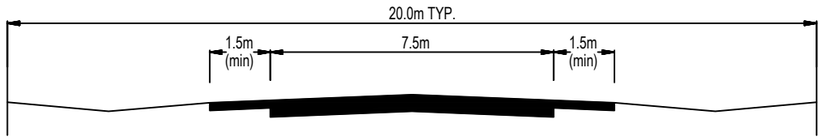


LOW DENSITY RESIDENTIAL COLLECTOR ROAD

ALL MEASUREMENTS IN MILLIMETRES

| REV | DESCRIPTION | DATE | DES | DRW | APP |
|---|---|---|---|---|---|
| B | ISSUED FOR REVIEW | 10.05.2016 | JZ | DL | DSL |
| A | ISSUED FOR REVIEW | 15.03.2016 | JZ | DL | DSL |

THIS PROJECT HAS BEEN ASSISTED BY THE LOCAL GOVERNMENT RESEARCH AND DEVELOPMENT SCHEME AND INSTITUTE OF PUBLIC WORKS ENGINEERING AUSTRALASIA

INFRASTRUCTURE GUIDELINES (SA)

SHEET TITLE

TYPICAL ROAD PROFILES RURAL LIVING & LOW DENSITY RESIDENTIAL AREAS

SCALE
NTS @ A3

DRAWING No.
SD 510

REV
B

## NOTES:

1. COLLECTOR ROADS AND HIGHER ORDER ROADS TO BE DESIGNED BASED ON TRAFFIC REQUIREMENTS INCLUDING BUS, TRAM, PEDESTRIANS AND CYCLISTS.
2. DIMENSIONS NOTED ARE TYPICAL, REFER GUIDELINE DOCUMENT FOR DEEMED TO COMPLY MINIMUM ROAD CARRIAGE WAY AND MINIMUM ROAD RESERVE WIDTHS.

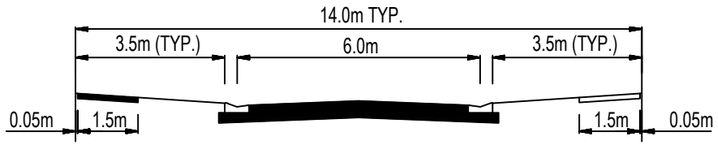


ACCESS LANE

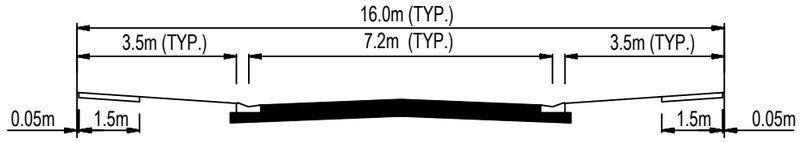


ACCESS STREET

ALL MEASUREMENTS IN MILLIMETRES

| REV | DESCRIPTION | DATE | DES | DRW | APP |
|---|---|---|---|---|---|
| C | MINOR AMENDMENTS | 18.07.2017 | JZ | JC | DSL |
| B | ISSUED FOR REVIEW | 10.05.2016 | JZ | DL | DSL |
| A | ISSUED FOR REVIEW | 15.03.2016 | JZ | DL | DSL |

THIS PROJECT HAS BEEN ASSISTED BY THE LOCAL GOVERNMENT RESEARCH AND DEVELOPMENT SCHEME AND INSTITUTE OF PUBLIC WORKS ENGINEERING AUSTRALASIA

INFRASTRUCTURE GUIDELINES (SA)

SHEET TITLE
TYPICAL ROAD SECTIONS URBAN AREAS

SCALE
NTS @ A3

DRAWING No.
SD 515

REV
C

## NOTES:

1. COLLECTOR ROADS AND HIGHER ORDER ROADS TO BE DESIGNED BASED ON TRAFFIC REQUIREMENTS INCLUDING BUS, TRAM, PEDESTRIANS AND CYCLISTS.
2. DIMENSIONS NOTED ARE TYPICAL, REFER GUIDELINE DOCUMENT FOR DEEMED TO COMPLY MINIMUM ROAD CARRIAGE WAY AND MINIMUM ROAD RESERVE WIDTHS.

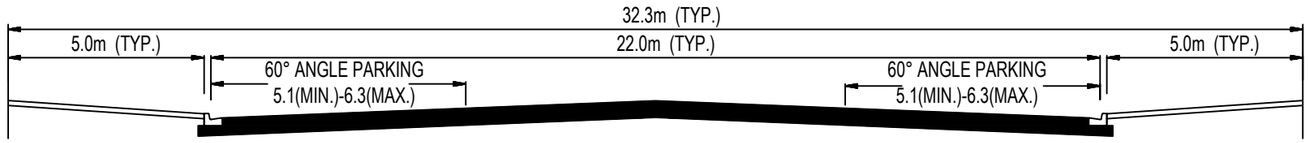


COMMERCIAL STREET

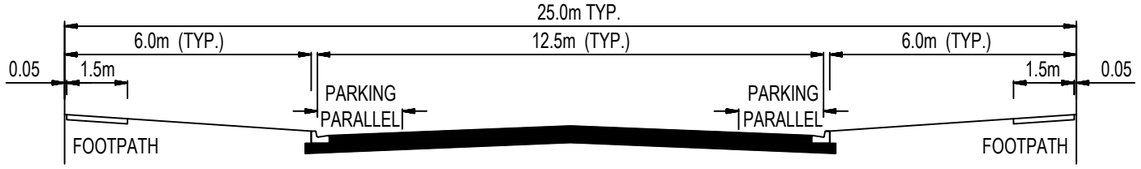


INDUSTRIAL STREET

ALL MEASUREMENTS IN MILLIMETRES

| REV | DESCRIPTION | DATE | DES | DRW | APP |
|---|---|---|---|---|---|
| C | MINOR AMENDMENTS | 18.07.2017 | JZ | JC | DSL |
| B | ISSUED FOR REVIEW | 10.05.2016 | JZ | DL | DSL |
| A | ISSUED FOR REVIEW | 15.03.2016 | JZ | DL | DSL |

THIS PROJECT HAS BEEN ASSISTED BY THE LOCAL GOVERNMENT RESEARCH AND DEVELOPMENT SCHEME AND INSTITUTE OF PUBLIC WORKS ENGINEERING AUSTRALASIA

INFRASTRUCTURE GUIDELINES (SA)

SHEET TITLE

TYPICAL ROAD PROFILES

COMMERCIAL STREET / INDUSTRIAL STREET

SCALE NTS @ A3

DRAWING No. SD 520

REV C

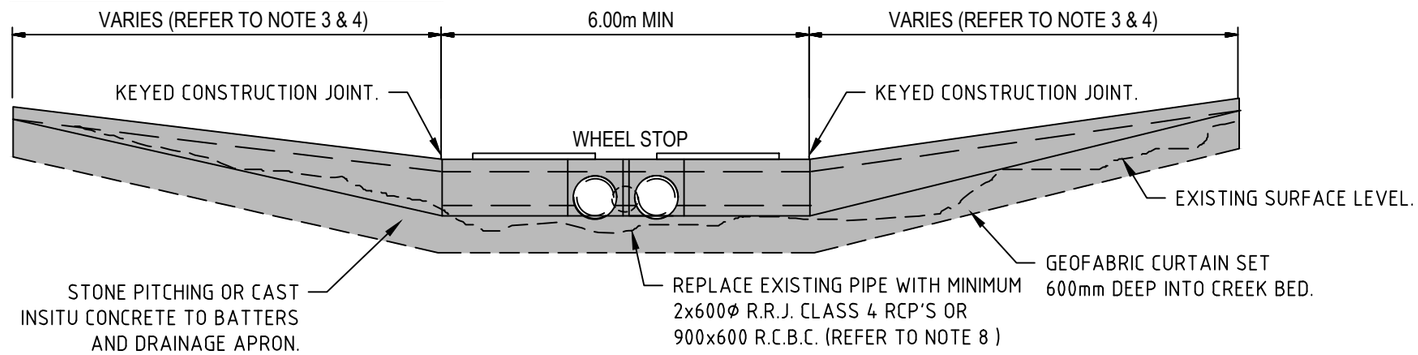


END ELEVATION PIPE CROSSING

FOR CONSTRUCTION DETAILS REFER TO SD 605

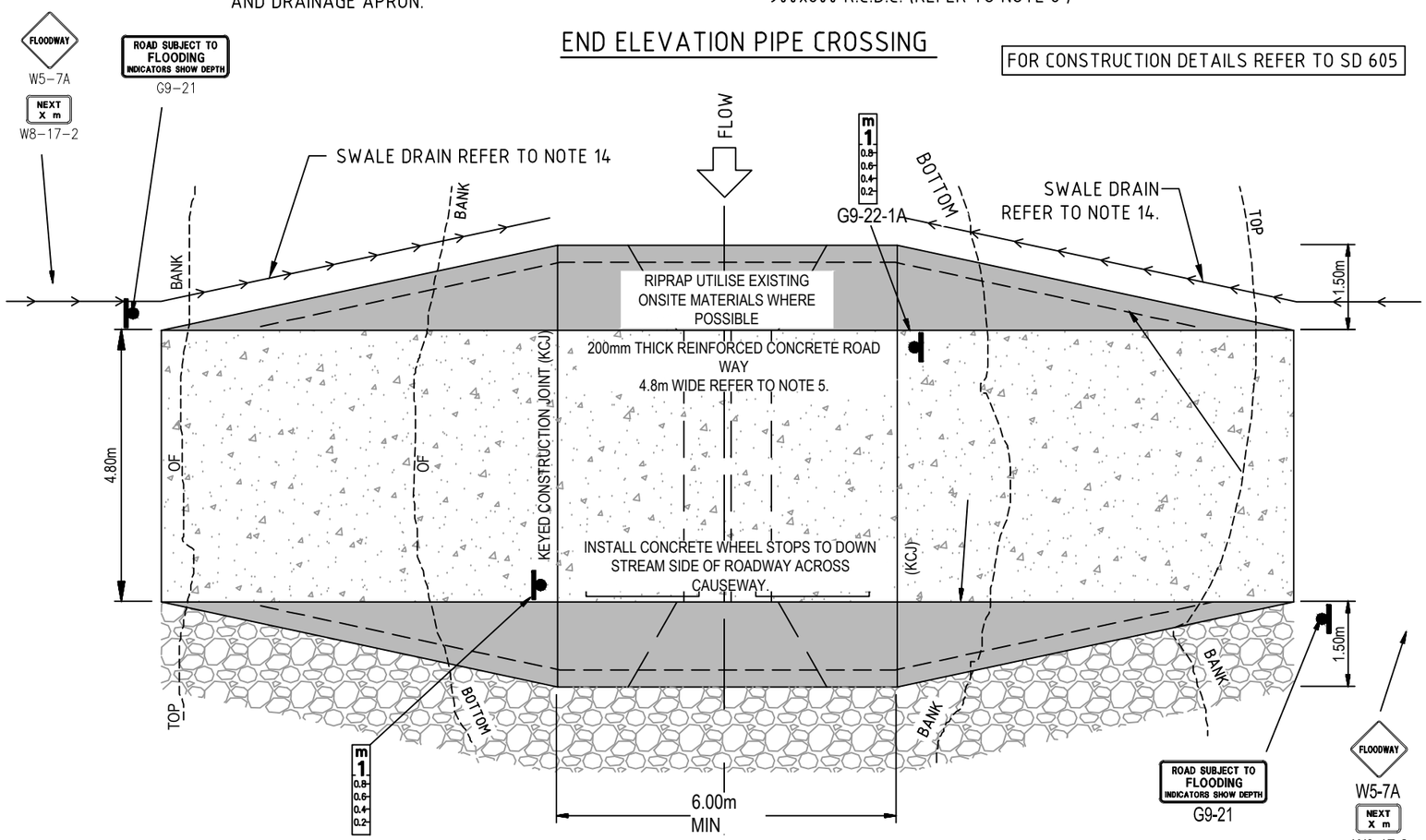


PLAN VIEW FLOODWAY CROSSING

## NOTES

1. DETAILS ARE FOR THE UPGRADING/RECONSTRUCTION OF AN EXISTING FLOODWAY ON A ONE LANE RURAL ROAD ONLY. DETAILS ARE NOT TO BE USED FOR NEW CONSTRUCTION UNLESS APPROVED BY COUNCILS ENGINEER.
2. THESE FLOODWAY DETAILS PERTAIN TO A 90° ROAD CROSSING. WHERE AT SKEWED CROSSING IS REQUIRED THE GENERAL ARRANGEMENTS MAY BE MODIFIED TO SUIT.
3. FLOODWAY IS DESIGNED TO CATER FOR Q10 FLOWS < $5m^3/s$. WITH AN ASSUMED DOWN STREAM STANDING WATER LEVEL OF 150mm ABOVE INVERT LEVEL AND MAY NOT SUIT ALL SITES. SITE APPROVAL IS TO BE OBTAINED FROM THE MANAGER PROJECT MANAGEMENT AND CONSTRUCTION PRIOR TO COMMENCING CONSTRUCTION.
4. ROADWAY APPROACHES FLOODWAY;-
   - DESIGN AND CONSTRUCT IN ACCORDANCE WITH AUSTROADS 'GUIDE TO ROAD DESIGN' PART 3 - GEOMETRIC DESIGN AND TO THE SATISFACTION OF THE SITE SUPERVISOR/CONTRACT MANAGER.
   - CAUSEWAY AND APPROACHES ARE TO BE 200mm THICK REINFORCED CONCRETE WITH SL82 MESH TOP & BOTTOM (75mm BOTTOM COVER) WITH CONSTRUCTION JOINTS AT 5m CENTRES (MAX) OR OTHERWISE SHOWN. CONCRETE TO BE N32 CURED FOR 7 DAYS WHERE A SIDE ROAD IS CONSTRUCTED OR N50 CURED FOR 12 HOURS WHERE A SIDE TRACK IS NOT CONSTRUCTED.
   - APPROACH GRADES ARE TO BE 1:20 MAX. MATCHING INTO EXISTING ROAD LEVELS. LENGTH OF CAUSE WAY APPROACHES ARE TO BE DETERMINED ON SITE BY THE SITE SUPERINTENDENT AND TO MATCH INTO EXISTING ROAD LEVELS AT THE TOP OF THE BANKS.
5. SIGN POSTING:-
   - FLOODWAY
   - NEXT... km (W8-17-2)
   - ROAD SUBJECT TO FLOODING - INDICATORS SHOWN DEPTH (G9-21)
   - DEPTH INDICATOR - (G9-22)
   - GUIDE POSTS, WARNING SIGNS AND DEPTH INDICATORS ARE TO BE INSTALLED AS PER THE MANUAL OF UNIFORM TRAFFIC CONTROL DEVICES.
6. TEMPORARY CONSTRUCTION OF SIDE ROADS ARE TO BE DETERMINED ON SITE BY THE SITE SUPERINTENDENT.
7. CULVERT CROSSING IS TO BE RECONSTRUCTED TO MATCH INTO EXISTING LEVELS. CLEAR AND RESHAPE CREEK BED WHERE REQUIRED.
8. BOX CULVERT PREFERRED FOR PERMANENT STREAM WHERE FISH PASSAGE IS REQUIRED
9. RIPRAP AND ROCK PITCH TO UTILISE EXISTING MATERIAL ON SITE WHERE POSSIBLE. RIPRAP TO BE SELECTED ANGULAR ROCKS WELL GRADE D50 300mm ROCKS PLACED 450mm DEEP. AREA, SIZE AND LOCATION TO BE DETERMINED ON SITE BY THE SITE SUPERINTENDENT.
10. BATTER TREATMENT, CULVERT HEADWALL AND APRON TO BE KEYED 600mm INTO CREEK BED. BATTERS TO BE SHAPED TO MATCH INTO EXISTING CREEK CHANNEL
11. ROCK PITCHING TO BATTERS AND PIPE SURROUND SHAPE PITCHING TO MATCH INTO CREEK FLOOR CHANNEL CAPACITY. PRECAST HEADWALLS OR CONCRETE CAST INSITU 150mm THICK (NOM.) MAY ALSO BE USED.
12. ROCK PITCHING ORDER OF WORKS:-
    - PLACE GEOFABRIC AND INSERT APRON ENDS 600mm MIN. INTO NATURAL MATERIAL.
    - PLACE ROCK/STONE ON GEOFABRIC.
    - APPLY CONCRETE TO ROCK SURFACES AND CREVICES
    - WASH LATENT FROM ROCK SURFACES.
13. GEOFABRIC TO BE NON WOVEN BIDIM A24 OR EQUIVALENT MEETING STRENGTH AND PERMEABILITY REQUIREMENTS REQUIREMENTS.
14. ADJOINING ROAD SWALE DRAINS ARE TO BE CLEANED AND RESHAPED TO SUIT.

SWALE DRAIN TREATMENT

| SWALE DRAIN | TREATMENT |
|---|---|
| 0.4%-2% | CONCRETE LINED |
| 2%-5% | GRASS LINED |
| 5%-10% | ROCK LINED |
| 10% OR GREAT | CONCRETE LINED |

15. SELECT FILL TO BE PM2/20 OG/QR COMPACTED TO 96% MODIFIED (ONE (1) TEST EACH SIDE OF CULVERT).
16. INSTALL 150mm HIGH WHEEL STOPS TO DOWN STREAM SIDE OF ROADWAY ONLY ACROSS CAUSEWAY AT 1.0m SPACING.

ALL MEASUREMENTS IN MILLIMETRES

| REV | DESCRIPTION | DATE | DES | DRW | APP |
|---|---|---|---|---|---|
| E | MINOR AMENDMENTS | 6.11.2018 | AF | AF | MDH |
| D | MINOR AMENDMENTS | 18.07.2017 | JZ | JC | DSL |
| C | ISSUED FOR REVIEW | 10.06.2016 | JZ | DL | DSL |
| B | ISSUED FOR REVIEW | 10.05.2016 | JZ | DL | DSL |
| A | ISSUED FOR REVIEW | 15.03.2016 | JZ | DL | DSL |

THIS PROJECT HAS BEEN ASSISTED BY THE LOCAL GOVERNMENT RESEARCH AND DEVELOPMENT SCHEME AND INSTITUTE OF PUBLIC WORKS ENGINEERING AUSTRALASIA

INFRASTRUCTURE GUIDELINES (SA)

SHEET TITLE

FLOODWAY - GENERAL ARRANGEMENT
LOW VOLUME RURAL ROADS

SCALE
NTS @ A3

DRAWING No.
SD 600

REV
E

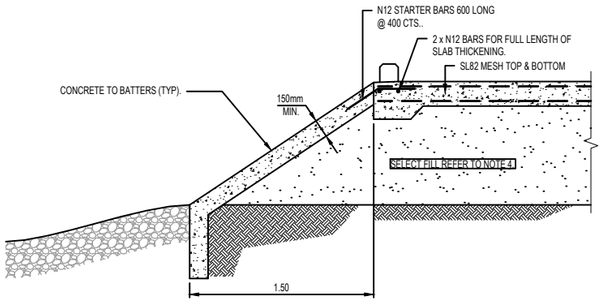


CONCRETE BATTER TREATMENT

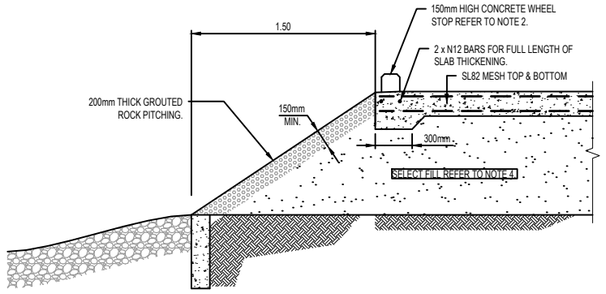


CONCRETE BATTER TREATMENT

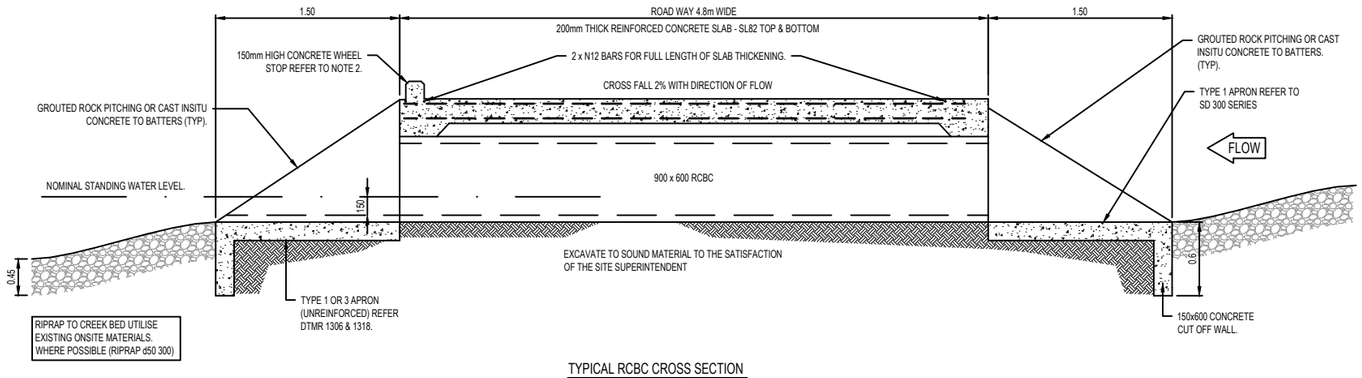


TYPICAL RCBC CROSS SECTION

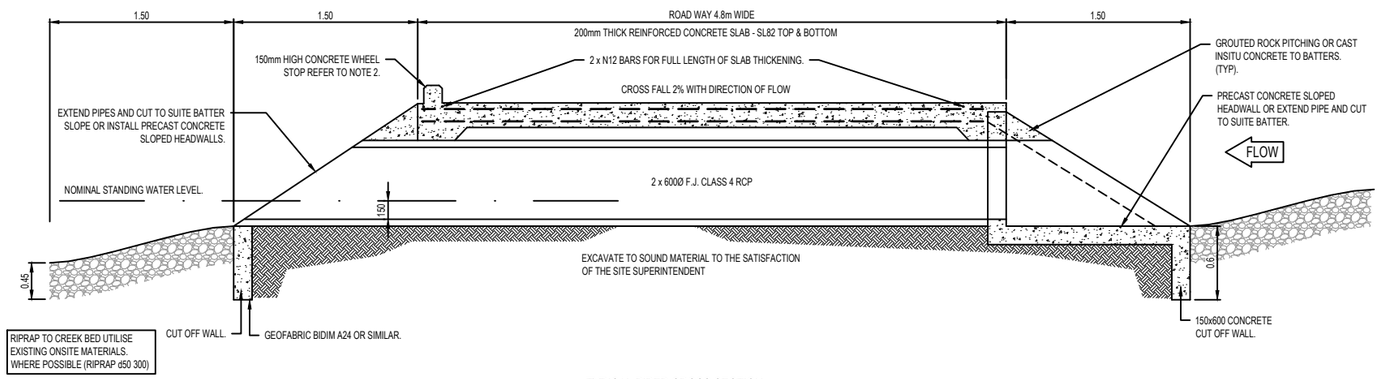


TYPICAL PIPED CROSS SECTION

## NOTES

1. FOR GENERAL ARRANGEMENT OF FLOODWAY AND STANDARD NOTES REFER TO SD 600
2. INSTALL 150mm HIGH WHEEL STOPS TO DOWN STREAM SIDE OF ROADWAY ONLY, ACROSS CAUSEWAY AT 1.0m SPACING.
3. END TREATMENT OPTIONS:- i) ROCK PITCHING. ii) REINFORCED CONCRETE 150mm THICK SL82. iii) SLOPED 600Ø HEADWALLS. iv) EXTEND PIPES AND CUT AT ANGLE TO MATCH EXISTING BATTER SLOPE.
4. SELECT FILL TO BE PM2/20 OG/QR COMPACTED TO 96% MODIFIED (ONE (1) TEST EACH SIDE OF FLOODWAY)

ALL MEASUREMENTS IN MILLIMETRES

| REV | DESCRIPTION | DATE | DES | DRW | APP |
|---|---|---|---|---|---|
| B | ISSUED FOR REVIEW | 10.05.2016 | JZ | DL | DSL |
| A | ISSUED FOR REVIEW | 15.03.2016 | JZ | DL | DSL |

THIS PROJECT HAS BEEN ASSISTED BY THE LOCAL GOVERNMENT RESEARCH AND DEVELOPMENT SCHEME AND INSTITUTE OF PUBLIC WORKS ENGINEERING AUSTRALASIA

INFRASTRUCTURE GUIDELINES (SA)

SHEET TITLE

FLOODWAY - DETAILS
LOW VOLUME RURAL ROADS

SCALE
NTS @ A3

DRAWING No.
SD 605

REV
B

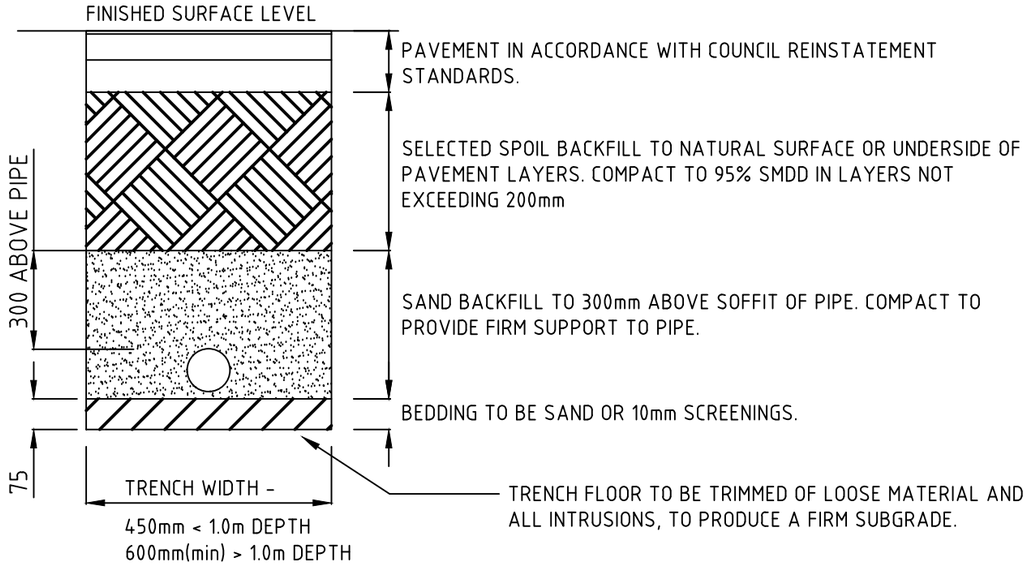


TYPICAL TRENCH AND BACKFILL -
NO GROUNDWATER

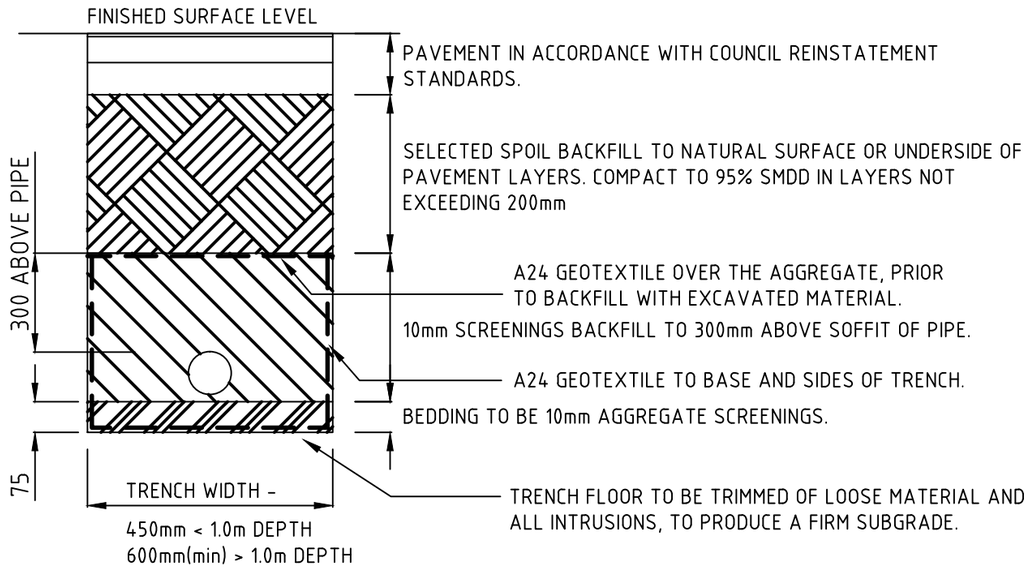


TYPICAL TRENCH AND BACKFILL -
IN GROUNDWATER

NOTES:
1. PIPES TO BE LOCATED CENTRALLY IN TRENCH
2. TRENCH BASE TO BE FIRM AND TO HAVE CONSTANT GRADE.
3. UNEVEN TRENCHES ARE NOT ACCEPTABLE.
4. DEWATER TRENCH DURING CONSTRUCTION.

ALL MEASUREMENTS IN MILLIMETRES

| REV | DESCRIPTION | DATE | DES | DRW | APP |
|---|---|---|---|---|---|
| B | MINOR AMENDMENTS | 06.11.2018 | AF | AF | MDH |
| A | MINOR AMENDMENTS | 18.07.2017 | JZ | JC | DSL |

THIS PROJECT HAS BEEN ASSISTED BY THE LOCAL GOVERNMENT RESEARCH AND DEVELOPMENT SCHEME AND INSTITUTE OF PUBLIC WORKS ENGINEERING AUSTRALASIA

INFRASTRUCTURE GUIDELINES (SA)

SHEET TITLE
TRENCH AND BACKFILL DETAILS
CWMS

SCALE
NTS @ A3

DRAWING No.
SD 700

REV
B

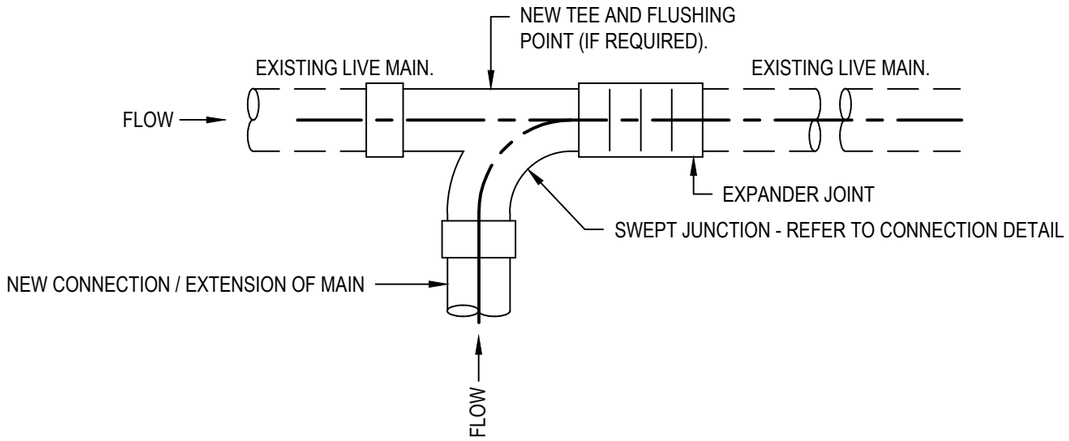


## PROCEDURE:

- WORKS TO BE UNDERTAKEN BY ACCREDITED PLUMBER.
- PLUMBER TO COMPLETE AND HAVE APPROVED PERMIT TO UNDERTAKE WORKS ON COUNCIL INFRASTRUCTURE.
- PLUMBER TO MAKE ARRANGEMENTS TO MANAGE EXISTING EFFLUENT FLOW, INCLUDING ALL NECESSARY SAFETY PRECAUTIONS, TO EPA REQUIREMENTS.
- ALL MATERIALS TO BE S.A.WATER APPROVED FOR WASTEWATER.
- PRIOR TO CUTTING INTO MAIN, PLUMBER TO HAVE EXPANDER JOINT, TEE AND FLUSHING POINT (IF REQ'D.) PREPARED TO ALLOW MINIMUM DISTURBANCE TO FLOW IN EXISTING MAIN.
- INSTALL EXPANDER JOINT, TEE AND FLUSHING POINT IN ACCORDANCE WITH MANUFACTURERS RECOMMENDATIONS AND COUNCIL DETAILS. WRAP EXPANDER JOINT IN DENSO TAPE. ALL CUT IN'S SHALL HAVE THE DENSO TAPE COATED WITH COPPER SULPHATE AND REWRAPPED WITH DUCT TAPE.

ALL MEASUREMENTS IN MILLIMETRES

| REV | DESCRIPTION | DATE | DES | DRW | APP |
|---|---|---|---|---|---|
| B | MINOR AMENDMENTS | 06.11.2018 | AF | AF | MDH |
| A | MINOR AMENDMENTS | 18.07.2017 | JZ | JC | DSL |

THIS PROJECT HAS BEEN ASSISTED BY THE LOCAL GOVERNMENT RESEARCH AND DEVELOPMENT SCHEME AND INSTITUTE OF PUBLIC WORKS ENGINEERING AUSTRALASIA

INFRASTRUCTURE GUIDELINES (SA)

SHEET TITLE
NEW CONNECTION / EXTENSION OF MAINS - CWMS

SCALE
NTS @ A3

DRAWING No.
SD 705

REV
B

## LEGEND

I.P. INSPECTION POINT

F.P. FLUSHING POINT

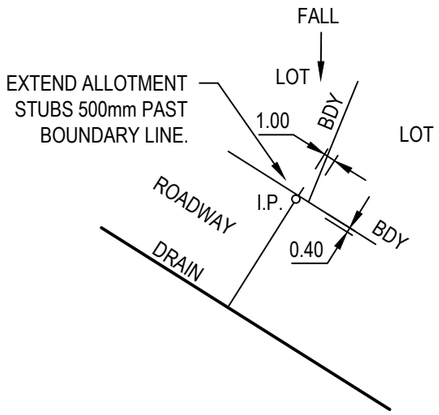


FRONT OF ALLOTMENT

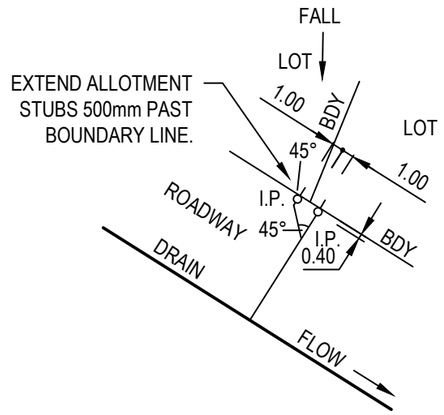


FRONT OF ALLOTMENT ('Y' CONN.)

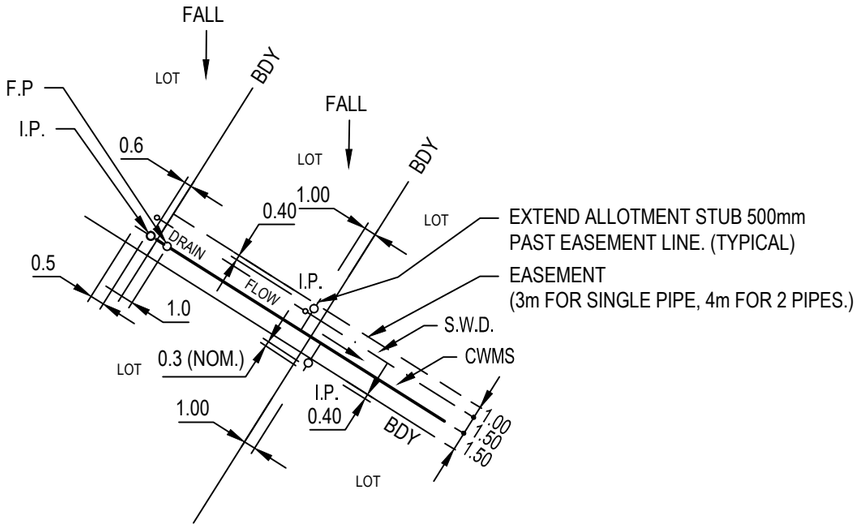


REAR OF ALLOTMENT

NOTE:

1. REFER CWMS DESIGN DRAWINGS FOR I.P. LOCATIONS OTHER THAN SHOWN ABOVE.

| REV | DESCRIPTION | DATE | DES | DRW | APP |
|---|---|---|---|---|---|
| B | MINOR AMENDMENTS | 06.11.2018 | AF | AF | MDH |
| A | MINOR AMENDMENTS | 18.07.2017 | JZ | JC | DSL |

THIS PROJECT HAS BEEN ASSISTED BY THE LOCAL GOVERNMENT RESEARCH AND DEVELOPMENT SCHEME AND INSTITUTE OF PUBLIC WORKS ENGINEERING AUSTRALASIA

INFRASTRUCTURE GUIDELINES (SA)

SHEET TITLE

TYPICAL CONNECTION I.P. LOCATIONS CWMS

SCALE NTS @ A3

DRAWING No. SD 710

REV B

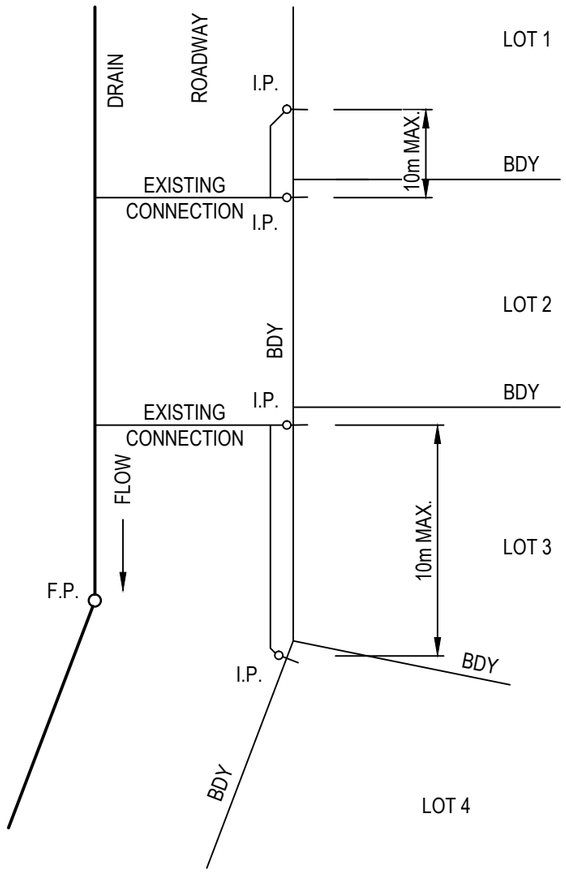


PLAN

## LEGEND

I.P. INSPECTION POINT

F.P. FLUSHING POINT

## NOTE:

1. CHECK INVERT OF NEW CONNECTION IS SUFFICIENTLY DEEP TO SERVICE THE ALLOTMENT. IF TOO SHALLOW A NEW CONNECTION TO THE MAIN DRAIN WILL BE REQUIRED
2. WHERE CONNECTION EXCEEDS 10m A NEW CONNECTION TO THE MAIN IS REQUIRED.

ALL MEASUREMENTS IN MILLIMETRES

| REV | DESCRIPTION | DATE | DES | DRW | APP |
|---|---|---|---|---|---|
| B | MINOR AMENDMENTS | 06.11.2018 | AF | AF | MDH |
| A | MINOR AMENDMENTS | 18.07.2017 | JZ | JC | DSL |

THIS PROJECT HAS BEEN ASSISTED BY THE LOCAL GOVERNMENT RESEARCH AND DEVELOPMENT SCHEME AND INSTITUTE OF PUBLIC WORKS ENGINEERING AUSTRALASIA

INFRASTRUCTURE GUIDELINES (SA)

SHEET TITLE

'Y' CONNECTION OFF AN EXISTING CONNECTION - CWMS

SCALE NTS @ A3

DRAWING No. SD 715

REV A

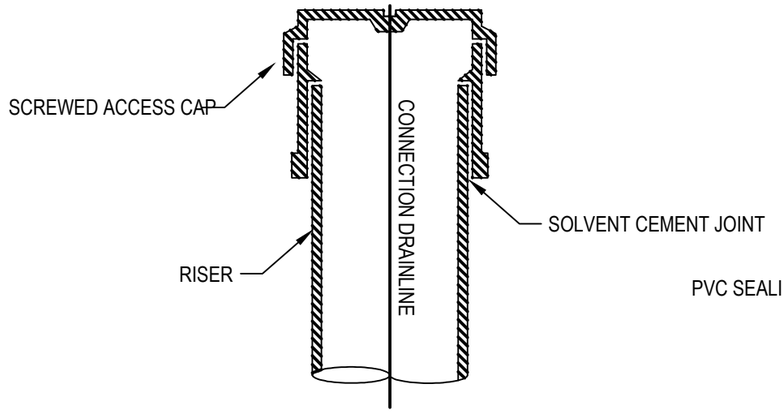


TYPICAL SCREWED ACCESS CAP FOR FLUSHING POINT & HOUSE CONNECTION RISERS

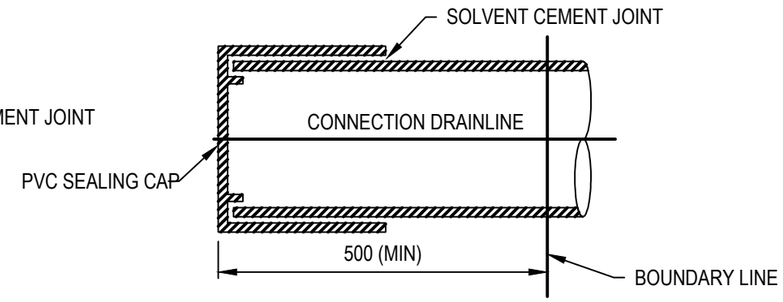


TYPICAL SEALING CAP FOR HOUSE CONNECTIONS

## UPVC SEALING CAP DETAILS

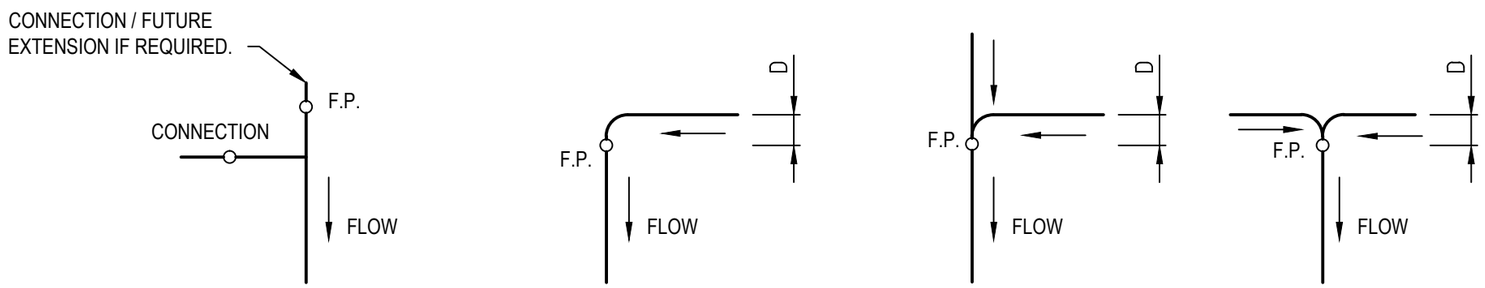


TERMINAL LOCATION BEND JUNCTION JUNCTION

## IN LINE FLUSHING POINT LOCATIONS

| PIPE DIAMETER | OFFSET 'D' |
|---|---|
| Ø100mm | 500mm |
| Ø150mm | 600mm |
| Ø225mm | 800mm |

ALL MEASUREMENTS IN MILLIMETRES

| REV | DESCRIPTION | DATE | DES | DRW | APP |
|---|---|---|---|---|---|
| B | MINOR AMENDMENTS | 6.11.2018 | AF | AF | MDH |
| A | MINOR AMENDMENTS | 18.07.2017 | JZ | JC | DSL |

THIS PROJECT HAS BEEN ASSISTED BY THE LOCAL GOVERNMENT RESEARCH AND DEVELOPMENT SCHEME AND INSTITUTE OF PUBLIC WORKS ENGINEERING AUSTRALASIA

INFRASTRUCTURE GUIDELINES (SA)

SHEET TITLE
SEALING CAP DETAILS AND IN LINE FLUSHING POINT LOCATIONS
CWMS

SCALE
NTS @ A3

DRAWING No.
SD 720

REV
B

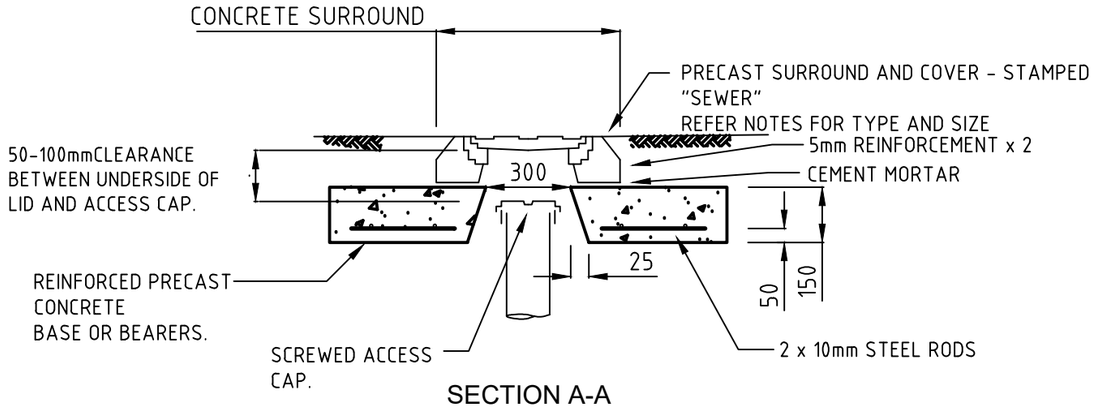


SECTION A-A

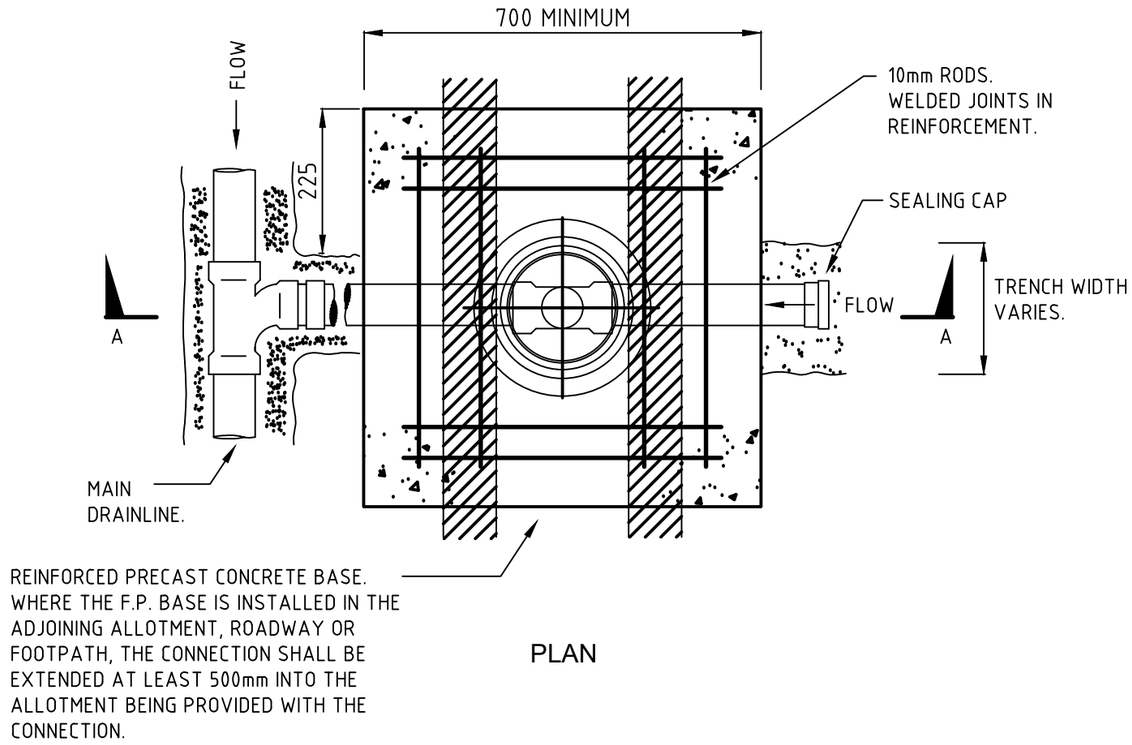


PLAN

NOTES:

1. "TYPE 1" SLAB AND COVER TO BE USED IN ROADS, ROAD RESERVES AND ALL TRAFFICABLE AREAS.
2. "TYPE 2" SLAB AND COVER TO BE USED IN REAR OF ALLOTMENT ONLY - NON TRAFFICABLE AREAS.
3. ALL ON LINE FLUSHING POINTS & ALLOTMENT CONNECTION I.P.s "TYPE 1" TO HAVE PRECAST CONCRETE BASE.
4. USE 100X100X1000 LONG PERMAPINE OR EQUIVALENT BEARERS IN LIEU OF CONCRETE BASE FOR ALLOTMENT CONNECTION I.P.s "TYPE 2". BEARERS TO SPAN PERPENDICULAR TO TRENCH AND BE FOUNDED MIN. 200mm ONTO FIRM SOIL.
5. CAST IRON COVER SIZE TO BE 150mm FOR Ø100mm RISER AND 230mm FOR Ø150mm RISER

ALL MEASUREMENTS IN MILLIMETRES

| REV | DESCRIPTION | DATE | DES | DRW | APP |
|---|---|---|---|---|---|
| B | MINOR AMENDMENTS | 6.11.2018 | AF | AF | MDH |
| A | MINOR AMENDMENTS | 18.07.2017 | JZ | JC | DSL |

THIS PROJECT HAS BEEN ASSISTED BY THE LOCAL GOVERNMENT RESEARCH AND DEVELOPMENT SCHEME AND INSTITUTE OF PUBLIC WORKS ENGINEERING AUSTRALASIA

INFRASTRUCTURE GUIDELINES (SA)

SHEET TITLE

TYPICAL CONNECTION AND FLUSHING POINT COVER DETAILS CWMS

SCALE NTS @ A3

DRAWING No. SD 725

REV B

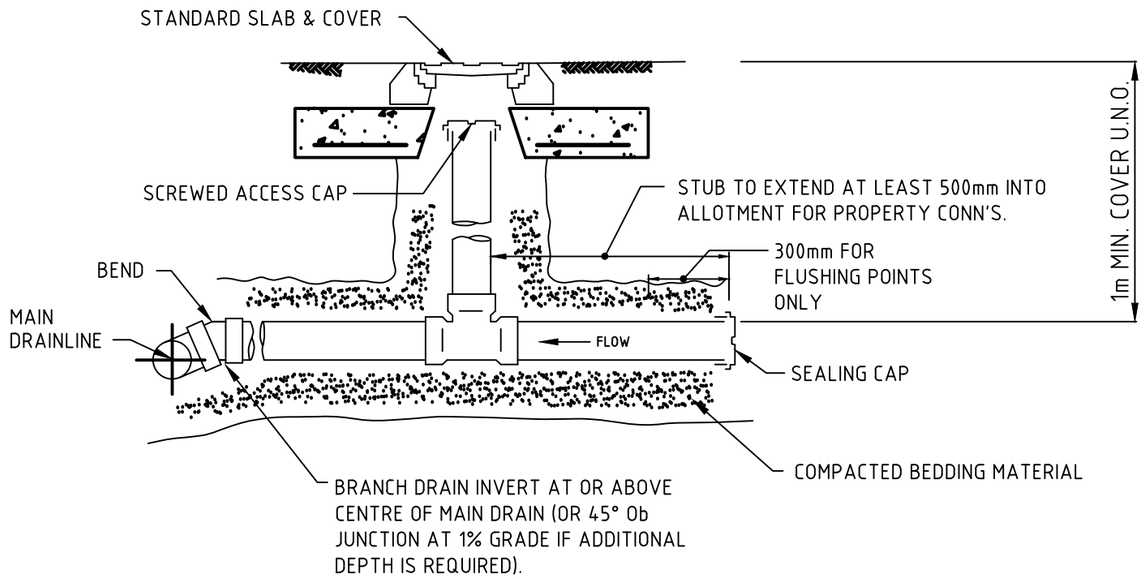


ELEVATION

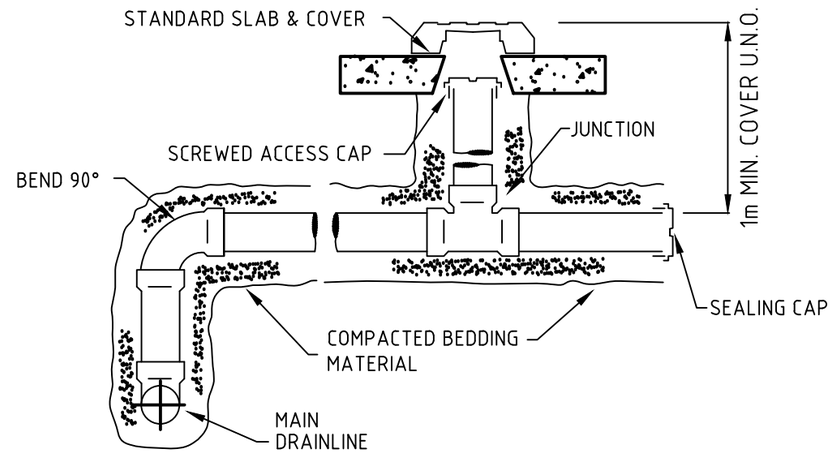


[B] ( CONNECTION ONLY )

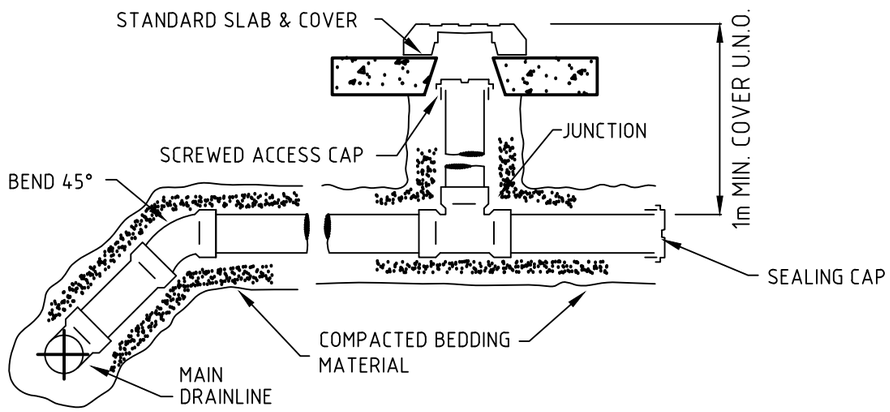


[A] ( CONNECTION ONLY )

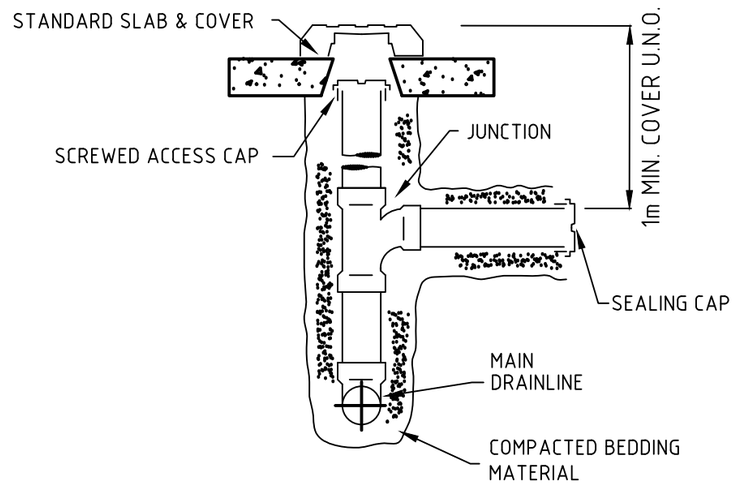


[C] ( FP OR CONNECTION )

ALL MEASUREMENTS IN MILLIMETRES

| REV | DESCRIPTION | DATE | DES | DRW | APP |
|---|---|---|---|---|---|
| B | MINOR AMENDMENTS | 06.11.2018 | AF | AF | MDH |
| A | MINOR AMENDMENTS | 18.07.2017 | JZ | JC | DSL |

THIS PROJECT HAS BEEN ASSISTED BY THE LOCAL GOVERNMENT RESEARCH AND DEVELOPMENT SCHEME AND INSTITUTE OF PUBLIC WORKS ENGINEERING AUSTRALASIA

INFRASTRUCTURE GUIDELINES (SA)

SHEET TITLE

# FLUSHING POINT OR MAXIMUM DEPTH CONNECTIONS - CWMS

SCALE NTS @ A3

DRAWING No. SD 730

REV B

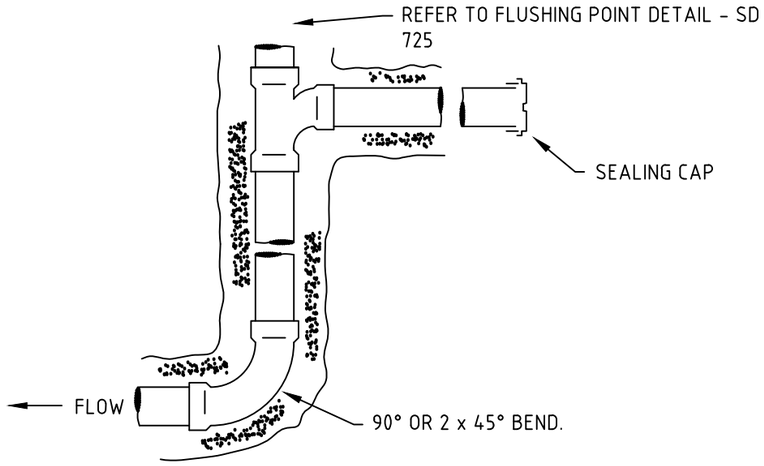


ELEVATION

SET UP WITH FLUSHING POINT AND CONNECTION

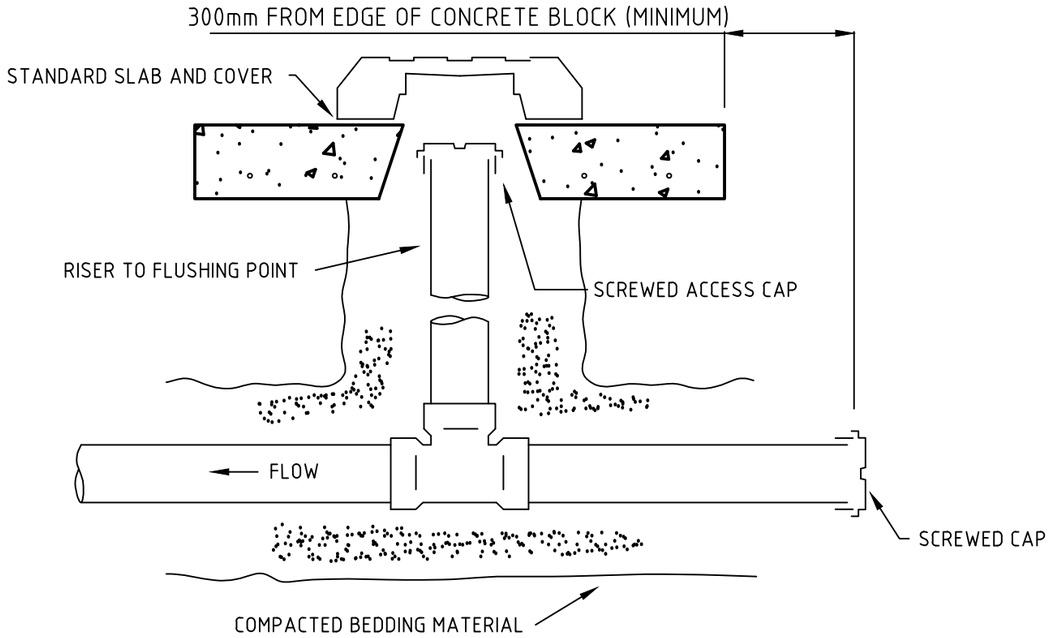


ELEVATION

TERMINAL OF DRAIN LINE AND F.P.

( WITH OPTIONAL CONNECTION SHOWN )

NOTE: IF CONNECTION NOT REQUIRED, OMIT STUB AND REPLACE TEE WITH 90° BEND RISER

ALL MEASUREMENTS IN MILLIMETRES

| REV | DESCRIPTION | DATE | DES | DRW | APP |
|---|---|---|---|---|---|
| B | MINOR AMENDMENTS | 06.11.2018 | AF | AF | MDH |
| A | MINOR AMENDMENTS | 18.07.2017 | JZ | JC | DSL |

THIS PROJECT HAS BEEN ASSISTED BY THE LOCAL GOVERNMENT RESEARCH AND DEVELOPMENT SCHEME AND INSTITUTE OF PUBLIC WORKS ENGINEERING AUSTRALASIA

INFRASTRUCTURE GUIDELINES (SA)

SHEET TITLE

TERMINAL OF DRAIN LINE & FLUSHING POINT - CWMS

SCALE

NTS @ A3

DRAWING No. SD 735

REV B

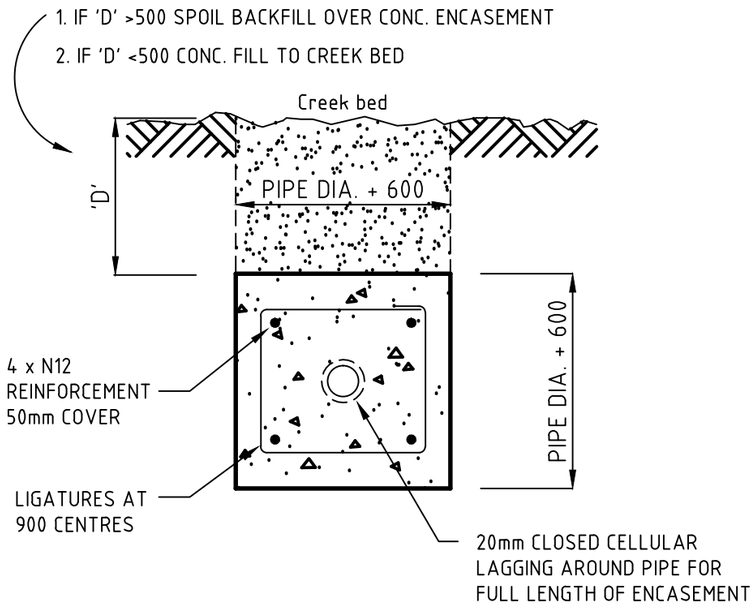


## TYPICAL CONCRETE ENCASEMENT OF DRAIN OR RISING MAIN THROUGH CREEKS

NOTES:

1. CONCRETE ENCASEMENT TO EXTEND 1m EACH SIDE OF INVERT OF CREEK.
2. SUPPORT PIPE DURING CONSTRUCTION TO MAINTAIN GRADE.

ALL MEASUREMENTS IN MILLIMETRES

| REV | DESCRIPTION | DATE | DES | DRW | APP |
|---|---|---|---|---|---|
| | | | | | |
| | | | | | |
| | | | | | |
| B | MINOR AMENDMENTS | 6.11.2018 | AF | AF | MDH |
| A | MINOR AMENDMENTS | 18.07.2017 | JZ | JC | DSL |

THIS PROJECT HAS BEEN ASSISTED BY THE LOCAL GOVERNMENT RESEARCH AND DEVELOPMENT SCHEME AND INSTITUTE OF PUBLIC WORKS ENGINEERING AUSTRALASIA

INFRASTRUCTURE GUIDELINES (SA)

SHEET TITLE
TYPICAL CONCRETE ENCASEMENT OF DRAIN OR RISING MAIN THROUGH CREEKS - CWMS

SCALE
NTS @ A3

DRAWING No.
SD 740

REV
B

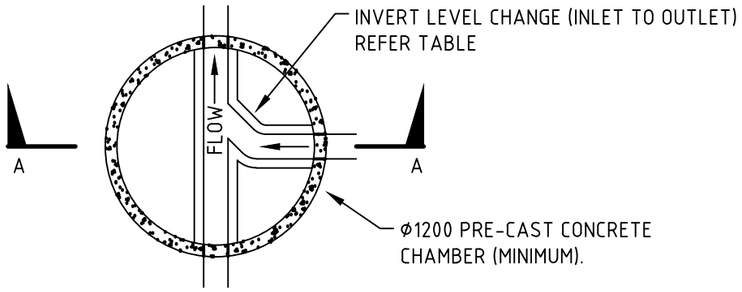


PLAN

| INVERT LEVEL CHANGE ACROSS MANHOLES | |
|---|---|
| CHANGE IN FLOW DIRECTION | MINIMUM FALL ACROSS PIT |
| STRAIGHT THROUGH OR FOR BENDS <45° | MAINTAIN PIPE GRADE |
| FOR BENDS 45° TO 90° | 30mm |
| FOR BENDS > 90° | 60mm |

NOTES: WHERE PIPE DIAMETER CHANGES ACROSS MANHOLE - MATCH OBVERT LEVEL OF PIPES

NOTE:

- CAST IRON LID & FRAME WITH "GATIC" TYPE LIFTING LUGS. OR SIMILAR APPROVED - CLASS 'D'.
- C.I. COVER AND FRAME TO BE A MATCHING SET WITH PRE-CAST CONCRETE COVER SLAB.
- LID TO BE STAMPED "SEWER".

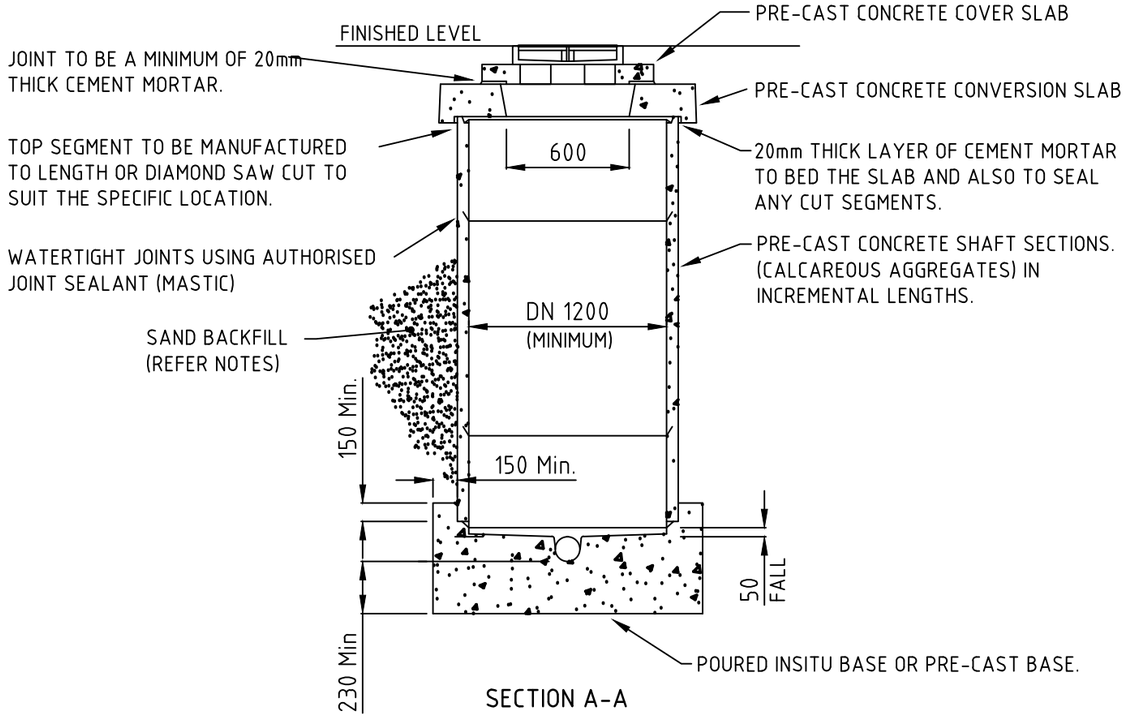


SECTION A-A

NOTES:

1. CONCRETE TO BE 32Mpa SULPHATE RESISTANT.
2. LIFTING HOLES AND OTHER PERFORATIONS IN CHAMBER WALL TO BE FILLED WITH EPOXY GROUT.
3. SAND SHALL BE APPROVED CLEAN PIT SAND. FREE FROM CLAY, ROCKS, LOAM & VEGETABLE MATTER AND SHALL BE COMPACTED TO 95% STANDARD COMPACTION.
4. SCREENINGS TO BE USED WHERE GROUNDWATER IS EVIDENT.
5. M.H./A.C. TO BE DESIGNED FOR UPLIFT IF REQUIRED.
6. UNLESS VARIED BY THE ABOVE NOTES, REFER TO S.A.WATER REQUIREMENTS.

ALL MEASUREMENTS IN MILLIMETRES

| REV | DESCRIPTION | DATE | DES | DRW | APP |
|---|---|---|---|---|---|
| B | MINOR AMENDMENTS | 6.11.2018 | AF | AF | MDH |
| A | MINOR AMENDMENTS | 18.07.2017 | JZ | JC | DSL |

THIS PROJECT HAS BEEN ASSISTED BY THE LOCAL GOVERNMENT RESEARCH AND DEVELOPMENT SCHEME AND INSTITUTE OF PUBLIC WORKS ENGINEERING AUSTRALASIA

INFRASTRUCTURE GUIDELINES (SA)

SHEET TITLE

MAINTENANCE HOLE / ACCESS CHAMBER ( MH / AC ) - CWMS

SCALE NTS @ A3

DRAWING No. SD 745

REV B